PRICE SHEET: C35R
EFFECTIVE: 8/1/22
REVISED: 4/14/25

STERLING
COMMERCIAL HYDRONIC PRODUCTS

COMMERCIAL FINNED TUBE RADIATION TRADE PRICES

STYLES: S, F, FT, T, E, X, XC, AR, PM, SS, LB2, LCS-10 & GUARDIAN

INDEX

ITEM
PAGE

Elements 2-3
Rough-in Materials
Brackets, Hangers and Backplate 3
Versa-Line
S, T, F, FT, RD, PM, SS, E, X, XC 4-10
LCS-10 11
LB-2 11
Classic
Wiped Edge, Slip Jointed, Louvered Inlet, Slope Top and Pedestal Mounted 12-20
Dura-Vane II 21-22
Guardian 23
Standard Enclosure Modifications, Louvered Inlet, Draft Barrier 24
Pipe Enclosures 25
Typical Enclosure Layouts 26-27
Ordering Procedures 28
Terms of Sale 29
Warranty 30

STERLING
COMMERCIAL HYDRONIC PRODUCTS
260 North Elm St., Westfield, MA 01085 Tel: (413) 564-5535
www.sterlingheat.com
A MESTEK COMPANY

MADE IN THE USA

ELEMENTS

COPPER-ALUMINUM & STEEL ELEMENTS USED WITH JVK, LB-2 & LCS-10 ENCLOSURES

R01 thru R05 Elements furnished in 3', 4', 5', 6', 7' & 8', lengths only — Consult factory for cost of special lengths.
R06 thru R10 Elements furnished in 3' to 12'6" in 1" increments.
R11 thru R16 Elements furnished in 3' to 12' lengths in 1" increments.

CATALOG NUMBER	TUBE SIZE	FIN SIZE HEIGHT x WIDTH	FIN GAUGE	FINS PER FOOT	LIST PRICE/FT.	WT.
R01	3/4" Cu.	2-1/2" x 2-1/4" Alum.	.011	50	**$ 11.85**	0.8
R02	3/4" Cu.	2-1/2" x 2-3/4" Alum.	.010	60	**13.90**	0.8
R03	1" Cu.	2-1/2" x 2-3/4" Alum.	.011	55	**17.45**	0.8
R04	3/4" Cu.	3-3/4" x 2-3/4" Alum.	.0135	50	**17.45**	0.8
R05	1" Cu.	3-3/4" x 2-3/4" Alum.	.0135	50	**20.20**	0.8
R06	1" Cu.	5" x 2-3/4" Alum.	.020	40	**33.30**	1.1
R07	1" Cu.	5" x 2-3/4" Alum.	.020	50	**37.45**	1.5
R08	1-1/4" Cu.	3-3/4" x 2-3/4" Alum.	.020	50	**36.85**	1.0
R09	1-1/4" Cu.	5" x 2-3/4" Alum.	.020	40	**37.45**	1.4
R10	1-1/4" Cu.	5" x 2-3/4" Alum.	.020	50	**42.35**	1.6
R11	1" IPS	3-3/4" x 2-3/4" Steel	.024	40	**41.50**	4.6
R12	1" IPS	5" x 2-3/4" Steel	.024	40	**44.40**	4.9
R13	1-1/4" IPS	5" x 2-3/4" Steel	.024	40	**44.40**	5.0
R14	1-1/4" IPS	3-3/4" x 2-3/4" Steel	.024	40	**41.50**	4.8
R15	1" IPS	5" x 2-3/4" Steel	.024	50	**50.40**	5.5
R16	1-1/4" IPS	5" x 2-3/4" Steel	.024	50	**51.10**	5.7

Note: List add will be 12% of total list price of materials for tagging individual cartons with room numbers, floor, building, etc.

STANDARD COMMERCIAL COPPER-ALUMINUM ELEMENTS

Standard elements shown available in lengths of from 3'0" to 12'6" in 1" increments.
(3/4" cu elements 8'0" max. length.)

CATALOG NUMBER	TUBE SIZE	FIN GAUGE .020" HEIGHT x WIDTH	FINS PER FT.	LIST PRICE/FT.	SHIP. WT. LBS./FT.
C3/4-33	3/4" Cu.	3-1/4" x 3-1/4" Alum.	32	**$ 20.20**	1.1
C3/4-34	"	"	40	**22.95**	1.2
C3/4-35	"	"	50	**25.70**	1.4
C3/4-43	"	4-1/4" x 4-1/4" Alum.	32	**27.10**	1.4
C3/4-44	"	"	40	**30.55**	1.6
C3/4-45	"	"	50	**35.40**	1.8
C3/4-433	"	3-5/8" x 4-1/4" Alum.	32	**24.30**	1.3
C3/4-434	"	"	40	**27.75**	1.5
C3/4-435	"	"	50	**32.00**	1.7
C33	1" Cu.	3-1/4" x 3-1/4" Alum.	32	**22.95**	1.3
C34	"	"	40	**25.70**	1.4
C35	"	"	50	**27.75**	1.5
C43	"	4-1/4" x 4-1/4" Alum.	32	**29.15**	1.6
C44	"	"	40	**33.30**	1.8
C45	"	"	50	**38.15**	2.0
C433	"	3-5/8" x 4-1/4" Alum.	32	**27.10**	1.5
C434	"	"	40	**30.55**	1.7
C435	"	"	50	**34.00**	1.9
C133	1-1/4" Cu.	3-1/4" x 3-1/4" Alum.	32	**27.10**	1.4
C134	"	"	40	**29.15**	1.5
C135	"	"	50	**32.00**	1.8
C143	"	4-1/4" x 4-1/4" Alum.	32	**33.30**	1.8
C144	"	"	40	**36.85**	2.0
C145	"	"	50	**41.60**	2.5
C1433	"	3-5/8" x 4-1/4" Alum.	32	**30.55**	1.6
C1434	"	"	40	**34.00**	1.8
C1435	"	"	50	**38.15**	2.0

Shorter lengths available
Add 9% List per ft.

SEE CATALOG FOR GUARANTEED WORKING PRESSURES.

ELEMENTS

CATALOG NUMBER	PIPE SIZE	FIN SIZE HEIGHT x WIDTH	FINS PER FT.	LIST PRICE/FT.	SHIP. WT. LBS./FT.
S33-024	1" IPS	3 1/4" X 3 1/4" Steel	32	**$ 32.55**	4.2
S33-032	"	"	32	**34.85**	4.8
S34-024	"	"	40	**35.30**	4.8
S34-032	"	"	40	**38.05**	5.5
S35-024	"	"	50	**40.70**	5.5
S35-032	"	"	50	**43.40**	6.5
S43-024	"	4 1/4" x 4 1/4" Steel	32	**39.25**	5.9
S43-032	"	"	32	**42.70**	6.9
S44-024	"	"	40	**44.75**	6.9
S44-032	"	"	40	**48.05**	8.2
S45-024	"	"	50	**51.65**	9.1
S45-032	"	"	50	**54.90**	9.8
S133-024	1 1/4" IPS	3 1/4" X 3 1/4" Steel	32	**32.55**	4.6
S133-032	"	"	32	**34.85**	5.2
S134-024	"	"	40	**35.30**	5.2
S134-032	"	"	40	**38.05**	5.9
S135-024	"	"	50	**40.70**	5.9
S135-032	"	"	50	**43.40**	6.9
S143-024	"	4 1/4" x 4 1/4" Steel	32	**39.25**	6.3
S143-032	"	"	32	**42.70**	7.3
S144-024	"	"	40	**44.75**	7.3
S144-032	"	"	40	**48.05**	8.6
S145-024	"	"	50	**51.65**	8.5
S145-032	"	"	50	**54.90**	10.2
S242-024	2" IPS	"	25	**43.45**	6.5
S242-032	"	"	25	**45.80**	7.4
S243-024	"	"	32	**45.50**	7.4
S243-032	"	"	32	**48.70**	8.4
S244-024	"	"	40	**49.75**	8.4
S244-032	"	"	40	**54.05**	9.7

STANDARD COMMERCIAL STEEL ELEMENTS

Elements manufactured in lengths of from 3'0" to 12'6" in 1" increments

Shorter lengths available – add 9% List per ft.

Note: List add will be 12% of total list price of materials for tagging individual cartons with room numbers, floor, building, etc.

BACKPLATE & BRACKETS

FULL BACKPLATES

CATALOG NUMBER	HEIGHT	LIST PRICE		SHIP WT. LBS/FT
		UNPAINTED GALV	BAKED POWDER CRS	
		LIST PRICE/FT	LIST PRICE/FT	
FBP-7	7"	**$ 11.10**	**$ 12.55**	0.9
FBP-8	8"	**11.25**	**12.60**	1.0
FBP-11	11"	**11.50**	**13.20**	1.4
FBP-14	14"	**12.70**	**15.15**	2.1
FBP-20	20"	**15.25**	**18.45**	2.8
FBP-24	24"	**16.60**	**19.95**	3.4
FBP-30	30"	**19.75**	**20.40**	4.3
FBP-36	36"	**22.80**	**23.60**	4.9

OTHER ROUGH-IN

CATALOG NUMBER	DESCRIPTION			LIST PRICE	WT.
PBP	Partial Backplate - 8' Lengths			**$4.00 /FT**	0.4
B-610	Mounting Strip - 8' Lengths			**4.30 /FT**	0.4
WTRBRKT-A7	Water Bracket w/Stand-Off	"A"	7"	**11.30 /EA**	0.4
WTRBRKT-B7	Water Bracket w/Stand-Off	"B"	7"	**11.30**	0.4
WTRBRKT-K8	Water Bracket	"K"	8"	**9.15**	0.4
WTRBRKT-K11	Water Bracket	"K"	11"	**9.85**	0.5
WTRBRKT-K14	Water Bracket	"K"	14"	**10.05**	0.7
WTRBRKT-A11	Water Bracket	"A"	11"	**10.05**	0.6
WTRBRKT-A14	Water Bracket	"A"	14"	**12.55**	0.7
WTRBRKT-A20	Water Bracket	"A"	20"	**12.75**	0.9
WTRBRKT-A24	Water Bracket	"A"	24"	**13.65**	1.0
WTRBRKT-B14	Water Bracket	"B"	14"	**12.55**	0.8
WTRBRKT-B20	Water Bracket	"B"	20"	**12.75**	0.9
WTRBRKT-B24	Water Bracket	"B"	24"	**13.65**	1.0
▼ SO-30P	Stand off/gauging tool 30" for PBP	"B"	30"	**3.65**	0.2
▼ SO-30F	Stand off 30" for FBP	"B"	30"	**2.05**	0.2
▼ SO-36P	Stand off/gauging tool 36" for PBP	"B"	36"	**3.90**	0.3
▼ SO-36F	Stand off 36" for FBP	"B"	36"	**2.45**	0.3
BRKT-K8	Steam Bracket	"K"	8"	**9.05**	0.14
BRKT-K11	Steam Bracket	"K"	11"	**9.15**	0.22
BRKT-K14	Steam Bracket	"K"	14"	**9.55**	0.25
▲ BRKT-A11	Steam Bracket	"A"	11"	**9.15**	0.5
▲ BRKT-A14	Steam Bracket	"A"	14"	**9.55**	0.6
▲ BRKT-A20	Steam Bracket	"A"	20"	**11.10**	0.8
▲ BRKT-A24	Steam Bracket	"A"	24"	**12.30**	0.9
▲ BRKT-B14	Steam Bracket	"B"	14"	**9.55**	0.7
▲ BRKT-B20	Steam Bracket	"B"	20"	**11.10**	0.8
▲ BRKT-B24	Steam Bracket	"B"	24"	**12.30**	0.9
▲ BB Hgr-BRKT A	Ball Bearing Hgr - Bracket MTD.	"A"		**7.25**	0.4
▲ BB Hgr-BRKT B	Ball Bearing Hgr - Bracket MTD.	"B"		**7.25**	0.5
BB Hgr - WALL K	Ball Bearing Hgr - Wall MTD.	"K"		**7.25**	0.4
BB Hgr - WALL A	Ball Bearing Hgr - Wall MTD.	"A"		**7.25**	0.4
BB Hgr - WALL B	Ball Bearing Hgr - Wall MTD.	"B"		**7.25**	0.4
RPH-K	Roll Pipe Hgr	"K"		**7.45**	0.2
RPH-A	Roll Pipe Hgr	"A"		**7.45**	0.3
RPH-B	Roll Pipe Hgr	"B"		**7.45**	0.4
* CR6A	Cradle 6A			**3.80**	0.1
* CR10	Cradle 10			**3.80**	0.1
JV-UGFAC	Urethane Gasket - Factory Installed			**$3.70 /FT**	0.1
JV-UGFLD	Urethane Gasket - Field Installed			**$2.80 /FT**	0.1
TUP	Spray Can Touch-Up Paint (1 Can)			**26.35 /EA**	1.0

For SS, ARLI, DVLI, LB2, LCS10, & Guardian, please see individual product pages for backplate. See PM product pages for pedestal brackets.

K = 3-9/16" Enclosure depth
A = 4-3/8" Enclosure depth
B = 5-5/16" Enclosure depth

7 = 7" height
8 = 8" height
11 = 11" height
14 = 14" height
20 = 20" height
24 = 24" height

Price Brackets & Ball Bearing Hangers as follows:
2-with 2' thru 6' lengths, 3-with 7', 7'6" & 8' lengths hgrs for 20" & 24" 2 tier, or as noted.
Partial Backplate — 4' and 8' lengths only.
Δ Standard brackets with bracket mounted hangers are typically used for steam jobs requiring pitch adjustment.
▼ Stand-Offs are to be used with 24" WTRBRKT & BRKT's with 30" & 36" enclosures.

*Cradle 1, 2, or 3A included in bracket and ball bearing hanger price.

SLIMLINE VERSA-LINE ENCLOSURES AND ACCESSORIES

S - Slope
T - Top Outlet

ENCLOSURE LISTINGS
(Depth)
K=3-9/16"

JV = Versa-Line with Slip Joint — Standard
D = Damper
TPD = Tamper Resistant Damper

LIST PRICE SHOWN

STANDARD ENCLOSURE LENGTHS
2' thru 8' in 6" increments

SEE PAGE 2 & 3 FOR ROUGH-IN MATERIAL PRICES

Note: Enclosure prices **do not** include brackets, hangers or backplate

DESCRIPTION	SLOPE TOP ENCLOSURES						FLAT TOP ENCLOSURES					
	JVK-S8		JVK-S11		JVK-S14		JVK-T, RD 8		JVK-T, RD 11		JVK-T, RD 14	
	PRICE	*WT.*	*PRICE*	*WT.*	*PRICE*	*WT.*	*PRICE*	*WT.*	*PRICE*	*WT.*	*PRICE*	*WT.*
Enclosure 18 GA.	**$ 17.00/FT**	2.5	**$ 19.45/FT**	2.8	**$ 20.25/FT**	3.6	**-**		**-**		**-**	
Enclosure 16 GA. ▲	**18.60**	2.8	**21.30**	3.1	**22.90**	4.2	**$ 19.45/FT**	4.0	**$ 21.60/FT**	4.4	**$ 22.85/FT**	5.0
Enclosure 14 GA.	**22.40**	3.7	**24.70**	4.0	**25.70**	5.0	**22.65**	5.5	**26.00**	5.9	**29.05**	6.5
Baked Powder (standard colors)	**3.25**	-	**3.60**	-	**3.95**	-	**3.40**	-	**3.95**	-	**4.65**	-
Baked Metallic (standard colors)	**4.80**	-	**5.15**	-	**5.95**	-	**5.00**	-	**5.95**	-	**6.80**	-
Knob Damper †	**9.10**	0.3	**9.10**	0.3	**9.10**	0.3	**9.10**	0.3	**9.10**	0.3	**9.10**	0.3
Tamper Resistant Damper †	**12.75**	0.3	**12.75**	0.3	**12.75**	0.3	**12.75**	0.3	**12.75**	0.3	**12.75**	0.3
3" End Cap	**26.80/EA**	1.1	**29.05/EA**	1.4	**31.45/EA**	2.0	**22.85/EA**	1.5	**28.30/EA**	1.9	**31.45/EA**	2.3
8-3/8" End Cap w/Access Door	**74.70**	2.5	**86.90**	2.8	**102.70**	3.5	**73.80**	2.9	**89.70**	3.2	**105.40**	3.5
4" Wall Sleeve	**15.40**	1.0	**19.85**	1.2	**20.65**	1.5	**13.90**	0.8	**19.85**	1.0	**20.65**	1.3
6" Wall Sleeve	**18.60**	1.3	**20.95**	1.6	**21.60**	2.3	**17.00**	1.5	**20.65**	1.8	**20.95**	2.1
8-3/8" Wall Sleeve	**21.30**	1.9	**23.70**	2.2	**24.10**	3.0	**18.15**	2.2	**23.00**	2.7	**23.70**	3.0
8-3/8" Wall Sleeve w/Access Door	**41.20**	2.0	**41.85**	2.3	**42.55**	3.0	**37.20**	2.4	**37.95**	2.7	**40.45**	3.0
Wall Sleeve Support	**8.25**	0.2	**8.55**	0.2	**10.20**	0.3	**11.25**	0.2	**11.75**	0.3	**12.05**	0.4
Inside Corner 90°	**56.25**	4.5	**67.30**	4.9	**73.15**	6.5	**61.10**	4.8	**67.50**	5.4	**73.15**	6.5
Inside Corner 135°	**80.45**	4.5	**92.65**	4.9	**107.05**	6.5	**75.85**	4.8	**92.70**	5.4	**107.05**	6.5
Outside Corner 90°	**66.05**	4.6	**81.15**	5.5	**95.55**	7.0	**68.15**	5.6	**81.20**	6.6	**95.55**	8.0
Outside Corner 135°	**92.65**	4.6	**107.05**	5.5	**121.80**	7.0	**92.65**	5.6	**107.05**	6.6	**117.40**	8.0
12" Valve Compartment 18 GA.	**63.85**	2.5	**73.20**	2.8	**76.80**	3.6	**0.00**		**0.00**		**0.00**	
12" Valve Compartment 16 GA.	**66.35**	2.8	**75.85**	3.1	**81.90**	4.2	**74.40**	4.0	**82.45**	4.4	**87.60**	5.0
12" Valve Compartment 14 GA.	**69.75**	3.7	**77.20**	4.0	**81.90**	5.0	**77.35**	5.5	**82.90**	5.9	**98.40**	6.5

† Damper for JVK-S & T8 only available with R01, R02 & R03 element.

Note: List add will be 12% of total list price of materials tagged for tagging individual cartons with room numbers, floor, building, etc.
For special colors consult factory

▲RD ONLY AVAILABLE IN 16 GA.

Available in Stainless Steel and Aluminum. Consult Factory.

Door Sizes for Accessories With Doors

JVK-S8 .....6 W x 5 H
JVK-S11.....6 W x 5 H
JVK-S14 .....6 W x 5 H

JVK-T8 .....6 W x 5 H
JVK-T11 .....6 W x 5 H
JVK-T14 .....6 W x 9 H

VERSA-LINE ENCLOSURES AND ACCESSORIES

S - Slope
T - Top Outlet
F - Front
FT - Front & Top

ENCLOSURE LISTINGS
(Depth)
A=4-3/8"

JV = Versa-Line with Slip Joint — Standard
D = Damper
TPD = Tamper Resistant Damper

LIST PRICE SHOWN

STANDARD ENCLOSURE LENGTHS
2' thru 8' in 6" increments

SEE PAGE 2 & 3 FOR ROUGH-IN MATERIAL PRICES

SLOPE TOP ENCLOSURES

Note: Enclosure prices **do not** include brackets, hangers or backplate

DESCRIPTION	JVA-S11		JVA-S14	
	PRICE	*WT.*	*PRICE*	*WT.*
Enclosure 18 GA.	**$ 19.45/FT**	2.8	**$ 19.75/FT**	3.6
Enclosure 16 GA.	**20.80**	3.1	**21.80**	4.2
Enclosure 14 GA.	**24.05**	4.0	**25.00**	5.0
Baked Powder (standard colors)	**4.60**	-	**5.10**	-
Baked Metallic (standard colors)	**6.75**	-	**7.15**	-
Knob Damper	**9.10**	0.3	**9.10**	0.3
Tamper Resistant Damper	**12.75**	0.3	**12.75**	0.3
3" End Cap	**30.75/EA**	1.4	**32.20/EA**	2.0
8-3/8" End Cap w/Access Door	**60.35**	2.5	**62.25**	3.2
4" Wall Sleeve	**21.30**	1.2	**21.60**	1.5
6" Wall Sleeve	**22.85**	1.6	**23.00**	2.3
8-3/8" Wall Sleeve	**25.85**	2.2	**26.10**	3.0
8-3/8 Wall Sleeve w/Access Door	**48.30**	2.3	**48.55**	3.0
Wall Sleeve Support	**9.95**	0.2	**11.50**	0.3
Inside Corner 90°	**75.85**	4.9	**76.35**	6.5
Inside Corner 135°	**102.55**	5.0	**103.40**	6.7
Outside Corner 90°	**83.55**	5.4	**84.45**	7.0
Outside Corner 135°	**106.95**	6.2	**116.65**	7.8
12" Valve Compartment 18 GA.	**70.85**	3.4	**73.10**	4.2
12" Valve Compartment 16 GA.	**74.50**	3.8	**76.85**	4.9
12" Valve Compartment 14 GA.	**79.00**	4.5	**81.10**	5.6

Can only use 3-1/4" wide element or smaller.

Note: List add will be 12% of total list price of materials tagged for tagging individual cartons with room numbers, floor, building, etc.
For special colors consult factory
No small order charge on "S" style.
All valve compartments require minimum one bracket
Available in Stainless Steel and Aluminum. Consult Factory.

FLAT TOP ENCLOSURES

Note: Enclosure prices **do not** include brackets, hangers or backplate

DESCRIPTION	JVA-F, T, FT, RD 14	
	PRICE	*WT.*
Enclosure 16 GA ▲	**$ 22.05/FT**	5.0
Enclosure 14 GA	**28.15**	6.5
Baked Powder (standard colors)	**4.85**	-
Baked Metallic (standard colors)	**7.20**	-
Knob Damper	**9.10**	0.3
Tamper Resistant Damper	**12.75**	0.3
3" End Cap	**30.75/EA**	2.3
8-3/8" End Cap w/Access Door	**62.80**	3.7
4" Wall Sleeve	**21.20**	1.3
6" Wall Sleeve	**23.50**	2.1
8-3/8" Wall Sleeve	**26.25**	3.0
8-3/8" Wall Sleeve w/Access Door	**49.35**	3.0
Wall Sleeve Support	**12.00**	0.5
Inside Corner 90°	**86.75**	6.5
Inside Corner 135°	**103.50**	6.8
Outside Corner 90°	**96.45**	7.2
Outside Corner 135°	**116.65**	8.0
12" Valve Compartment 16 GA	**92.85**	5.7
12" Valve Compartment 14 GA	**97.80**	7.2

Note: List add will be 12% of total list price of materials tagged for tagging individual cartons with room numbers, floor, building, etc.
For special colors consult factory
All valve compartments require minimum one bracket

▲RD ONLY AVAILABLE IN 16 GA.

Available in Stainless Steel and Aluminum. Consult Factory.

VERSA-LINE ENCLOSURES AND ACCESSORIES

S - Slope
T - Top Outlet
F - Front
FT - Front & Top

ENCLOSURE LISTINGS
(Depth)
B=5-5/16"

JV = Versa-Line with Slip Joint — Standard
D = Damper
TPD = Tamper Resistant Damper

LIST PRICE SHOWN

STANDARD ENCLOSURE LENGTHS
2' thru 8' in 6" increments

SEE PAGE 2 & 3 FOR ROUGH-IN MATERIAL PRICES

SLOPE TOP ENCLOSURES

Note: Enclosure prices **do not** include brackets, hangers or backplate

DESCRIPTION	JVB-S14		JVB-S20	
	PRICE	*WT.*	*PRICE*	*WT.*
Enclosure 18 GA.	**$ 20.35/FT**	3.6	**$ 23.90/FT**	4.3
Enclosure 16 GA.	**22.55**	4.2	**26.80**	5.2
Enclosure 14 GA.	**26.15**	5.0	**32.05**	5.4
Baked Powder (standard colors)	**5.15**	-	**5.35**	-
Baked Metallic (standard colors)	**7.75**	-	**7.95**	-
Knob Damper	**9.10**	0.3	**9.10**	0.3
Tamper Resistant Damper	**12.75**	0.3	**12.75**	0.3
3" End Cap	**33.35/EA**	2.0	**39.00/EA**	2.6
8-3/8" End Cap w/Access Door	**64.70**	3.2	**74.10**	4.3
4" Wall Sleeve	**23.85**	1.5	**28.30**	1.9
6" Wall Sleeve	**24.05**	2.3	**30.45**	2.7
8-3/8" Wall Sleeve	**27.10**	3.0	**33.25**	3.3
8-3/8 Wall Sleeve w/Access Door	**49.60**	3.0	**54.60**	3.3
Wall Sleeve Support	**11.90**	0.3	**13.85**	0.4
Inside Corner 90°	**80.00**	6.5	**94.10**	7.4
Inside Corner 135°	**105.60**	6.7	**120.55**	7.8
Outside Corner 90°	**100.45**	7.0	**123.80**	8.0
Outside Corner 135°	**121.20**	7.8	**144.20**	8.6
12" Valve Compartment 18 GA.	**79.15**	4.2	**93.45**	5.5
12" Valve Compartment 16 GA.	**80.85**	4.9	**95.25**	6.2
12" Valve Compartment 14 GA.	**86.25**	5.6	**98.00**	6.5

Use only with 4-1/4" wide elements.

Note: List add will be 12% of total list price of materials tagged for tagging individual cartons with room numbers, floor, building, etc.
For special colors consult factory
All valve compartments require minimum one bracket
Available in Stainless Steel and Aluminum. Consult Factory.

SLOPE TOP ENCLOSURES

Note: Enclosure prices **do not** include brackets, hangers or backplate

DESCRIPTION	JVB-S24		JVB-S30		JVB-S36	
	PRICE	*WT.*	*PRICE*	*WT.*	*PRICE*	*WT.*
Enclosure 18 GA.	**$ 29.85/FT**	5.6	**-**	-	**-**	-
Enclosure 16 GA.	**34.50**	6.7	**$ 61.20/FT**	7.4	**$ 66.10/FT**	8.6
Enclosure 14 GA.	**40.65**	8.0	**67.75**	9.1	**73.65**	10.4
Baked Powder (standard colors)	**5.55**	-	**5.70**	-	**6.15**	-
Baked Metallic (standard colors)	**8.10**	-	**8.65**	-	**9.10**	-
Knob Damper	**9.10**	0.3	**9.10**	0.3	**9.10**	0.3
Tamper Resistant Damper	**12.75**	0.3	**12.75**	0.3	**12.75**	0.3
3" End Cap	**46.70/EA**	3.6	**50.25/EA**	4.5	**61.10/EA**	5.4
8-3/8" End Cap w/Access Door	**85.15**	5.5	**95.40**	7.4	**99.95**	8.8
4" Wall Sleeve	**33.25**	2.0	**38.85**	2.5	**40.10**	2.8
6" Wall Sleeve	**35.55**	3.0	**42.60**	3.6	**44.60**	4.0
8-3/8" Wall Sleeve	**38.70**	4.2	**49.05**	4.8	**52.10**	5.5
8-3/8 Wall Sleeve w/Access Door	**64.70**	4.5	**75.35**	4.8	**78.70**	5.5
Wall Sleeve Support	**15.55**	0.5	**25.85**	0.7	**26.35**	0.9
Inside Corner 90°	**126.85**	8.0	**177.15**	8.9	**191.00**	9.8
Inside Corner 135°	**145.40**	8.7	**165.65**	9.8	**177.80**	10.9
Outside Corner 90°	**149.35**	9.3	**177.15**	10.3	**191.00**	11.3
Outside Corner 135°	**166.25**	9.9	**165.65**	10.7	**177.80**	13.6
12" Valve Compartment 18 GA.	**100.70**	6.2	**-**	-	**-**	-
12" Valve Compartment 16 GA.	**102.90**	7.3	**129.40**	7.8	**134.10**	8.6
12" Valve Compartment 14 GA.	**109.30**	8.6	**136.20**	9.1	**142.00**	10.4

Use only with 4-1/4" wide elements.

Note: List add will be 12% of total list price of materials tagged for tagging individual cartons with room numbers, floor, building, etc.
For special colors consult factory
All valve compartments require minimum one bracket.
Available in Stainless Steel and Aluminum. Consult Factory.

VERSA-LINE ENCLOSURES AND ACCESSORIES

S - Slope
T - Top Outlet
F - Front
FT - Front & Top

ENCLOSURE LISTINGS
(Depth)
B=5-5/16"

JV = Versa-Line with Slip Joint — Standard
D = Damper
TPD = Tamper Resistant Damper

LIST PRICE SHOWN

STANDARD ENCLOSURE LENGTHS
2' thru 8' in 6" increments

SEE PAGE 2 & 3 FOR ROUGH-IN MATERIAL PRICES

FLAT TOP ENCLOSURES

Note: Enclosure prices **do not** include brackets, hangers or backplate

DESCRIPTION	JVB-F, T, FT, RD 14		JVB-F, T, FT, RD 20		JVB-F, T, FT, RD 24		JVB-F, FT, RD 30		JVB-F, FT, RD 36	
	PRICE	*WT.*	*PRICE*	*WT.*	*PRICE*	*WT.*	*PRICE*	*WT.*	*PRICE*	*WT.*
Enclosure 16 GA ▲	**$ 22.90/FT**	5.0	**$ 27.10/FT**	6.5	**$ 37.65/FT**	7.4	**$ 61.80/FT**	8.0	**$ 66.95/FT**	10.0
Enclosure 14 GA	**29.25**	6.5	**35.20**	7.7	**48.10**	9.1	**68.70**	10.6	**74.80**	11.9
Baked Powder (standard colors)	**5.10**	-	**5.20**	-	**5.55**	-	**5.80**	-	**6.15**	-
Baked Metallic (standard colors)	**7.70**	-	**7.90**	-	**8.35**	-	**8.65**	-	**9.10**	-
Knob Damper	**9.10**	0.3	**9.10**	0.3	**9.10**	0.3	**9.10**	0.3	**9.10**	0.3
Tamper Resistant Damper	**12.75**	0.3	**12.75**	0.3	**12.75**	0.3	**12.75**	0.3	**12.75**	0.3
3" End Cap	**32.05/EA**	2.3	**39.00/EA**	2.8	**46.70/EA**	3.6	**50.60/EA**	4.8	**53.05/EA**	5.4
8-3/8" End Cap w/Access Door	**68.60**	3.7	**77.05**	4.7	**86.50**	5.5	**87.55**	7.9	**91.45**	9.0
4" Wall Sleeve	**21.95**	1.3	**26.95**	1.8	**31.50**	2.0	**36.65**	2.3	**37.65**	2.7
6" Wall Sleeve	**24.10**	2.1	**29.85**	2.5	**34.80**	3.0	**40.70**	3.5	**42.20**	4.0
8-3/8" Wall Sleeve	**27.10**	3.0	**34.60**	3.5	**39.50**	4.2	**46.75**	4.9	**49.45**	5.6
8-3/8" Wall Sleeve w/Access Door	**51.35**	3.0	**60.90**	3.9	**67.85**	4.5	**72.75**	4.9	**75.60**	5.6
Wall Sleeve Support	**12.55**	0.5	**14.55**	0.4	**17.35**	0.5	**25.00**	0.8	**28.85**	1.0
Inside Corner 90°	**91.65**	6.5	**103.90**	7.0	**133.15**	8.0	**169.55**	16.0	**182.90**	18.2
Inside Corner 135°	**107.95**	6.8	**120.55**	7.5	**145.40**	8.7	**157.30**	12.3	**168.85**	14.1
Outside Corner 90°	**100.45**	7.2	**123.80**	8.0	**149.35**	9.3	**144.35**	15.9	**157.95**	18.2
Outside Corner 135°	**121.20**	8.0	**144.20**	8.5	**166.25**	9.9	**132.45**	12.3	**144.40**	14.1
12" Valve Compartment 16 GA	**96.45**	5.7	**115.45**	7.1	**125.30**	7.9	**126.35**	7.6	**130.75**	8.8
12" Valve Compartment 14 GA	**100.45**	7.2	**121.60**	8.3	**128.50**	9.6	**134.75**	9.6	**139.90**	11.0

Note: List add will be 12% of total list price of materials tagged for tagging individual cartons with room numbers, floor, building, etc.
For special colors consult factory
All valve compartments require minimum one bracket

▲RD ONLY AVAILABLE IN 16 GA.

Available in Stainless Steel and Aluminum. Consult Factory.

PM ENCLOSURES AND ACCESSORIES

ENCLOSURE LISTINGS
(Depth)
B-PM=6-1/16"
B-2PM=10-5/16"

JV = Versa-Line with Slip Joint — Standard

STANDARD ENCLOSURE LENGTHS
2' thru 8' in 6" increments

LIST PRICE SHOWN

SEE PAGE 2 & 3 FOR ROUGH-IN MATERIAL PRICES

STYLE "PM" PEDESTAL MOUNT ASSEMBLY

Note: Enclosure prices **do not** include brackets

DESCRIPTION	JVB-PM		JVB-2PM	
	PRICE	*WT.*	*PRICE*	*WT.*
Enclosure 16 GA. (Standard)	**$ 25.00/FT**	3.9	**$ 34.60/FT**	5.0
Enclosure 14 GA.	**31.05**	4.9	**40.95**	6.2
Baked Powder (standard colors)	**3.95**	-	**4.60**	-
Baked Metallic (standard colors)	**5.95**	-	**6.75**	-
Support Brkt. Assembly (Maximum 3' on Center)	**39.80/EA**	2.0	**60.50/EA**	2.4
Cradle #6A (For Use With Return Pipe - See Catalog)	**3.80**	0.1	**8.00**	0.2
Cradle #10 (For Use With Return Pipe - See Catalog)	**3.80**	0.1	**8.00**	0.2
3" End Cap Flush Mount "FM" (LH or RH)	**40.35**	2.0	**45.15**	2.8
3" End Cap Overlap "OL"	**40.35**	2.0	**45.15**	2.4
4" Wall Sleeve	**17.50**	2.0	**19.80**	2.5
6" Wall Sleeve	**19.75**	2.5	**22.65**	3.0
8-3/8" Wall Sleeve	**22.45**	3.5	**25.65**	3.8
8-3/8" Wall Sleeve w/Access Door	**47.05**	3.5	**51.00**	3.8
Wall Sleeve Support	**19.75**	0.8	**22.55**	1.4
Inside Corner or Outside Corner 90°	**94.60**	7.5	**116.65**	11.5
Inside Corner or Outside Corner 135°	**120.55**	7.8	**137.75**	11.8

PM — 1 ROW FREE STANDING ENCLOSURE 6-3/4" HIGH
2 PM — 2 ROW FREE STANDING ENCLOSURE 6-3/4" HIGH

Note: List add will be 12% of total list price of materials tagged for tagging individual cartons with room numbers, floor, building, etc.

Recommended Bracket Quantity: 2' thru 4' = 2 Brackets
4'6" thru 8' = 3 Brackets

Available in Stainless Steel and Aluminum. Consult Factory.

JV = Versa-Line with Slip Joint — Standard

ENCLOSURE LISTINGS
(Depth)
B=5-5/16" H

LIST PRICE SHOWN

STANDARD ENCLOSURE LENGTHS
2' thru 8' in 6" increments

SEE PAGE 2 & 3 FOR ROUGH-IN MATERIAL PRICES

STYLE "SS" DOUBLE SLOPE TOP ASSEMBLY

Note: Enclosure prices **do not** include brackets, hangers or backplate

DESCRIPTION	JVB-SS19		JVB-SS25		JVB-SS29	
	PRICE	*WT.*	*PRICE*	*WT.*	*PRICE*	*WT.*
Enclosure (18 GA. CRS)	**$ 42.10/FT**	4.3	**$ 52.60/FT**	5.3	**$ 58.60/FT**	5.9
Enclosures (16 GA. CRS)	**45.95**	5.6	**55.55**	6.3	**62.80**	7.7
Enclosures (14 GA. CRS)	**49.95**	7.0	**60.90**	7.9	**68.85**	9.6
Baked Powder (standard colors)	**5.20**	-	**5.35**	-	**6.75**	-
Baked Metallic (standard colors)	**8.50**	-	**8.95**	-	**9.15**	-
Knob Damper	**9.10**	0.3	**9.10**	0.3	**9.10**	0.4
Tamper Resistant Damper	**12.75**	0.3	**12.75**	0.3	**12.75**	0.4
Backplate 20 GA. Galvannealed (Full Height) Unpainted	**15.40**	2.7	**19.05**	3.4	**22.45**	3.9
Backplate 20 GA. CRS (Full Height) Baked Powder	**18.30**	2.7	**22.65**	3.4	**26.85**	3.9
Vertical Wall Bracket	**7.15/EA**	0.5	**7.55/EA**	0.6	**8.25/EA**	0.7
Bracket Mounted Ball Bearing Hanger	**7.25**	0.5	**7.25**	0.5	**7.25**	0.5
3" End Cap	**51.80**	3.0	**60.05**	3.7	**65.20**	4.2
9" End Cap w/Access Door	**89.50**	5.6	**99.00**	6.6	**106.60**	7.3
4" Wall Sleeve	**31.20**	1.4	**36.95**	1.8	**41.85**	2.0
9" Wall Sleeve	**39.15**	3.0	**45.15**	3.6	**49.50**	4.2
9" Wall Sleeve w/Access Door	**62.85**	4.3	**73.00**	4.9	**76.40**	5.5
Wall Sleeve Support	**22.45**	1.5	**24.70**	1.9	**26.90**	2.3
Inside Corner 90°	**115.85**	6.8	**134.00**	8.0	**156.65**	8.8
Inside Corner 135°	**139.45**	7.0	**158.10**	8.2	**181.95**	10.0
Outside Corner 90°	**130.15**	8.8	**164.85**	11.2	**178.70**	12.8
Outside Corner 135°	**153.65**	9.0	**188.30**	11.4	**203.00**	13.0

SS 19 — DOUBLE SLOPE TOP ENCLOSURE **19-1/2" HIGH**
SS 25 — DOUBLE SLOPE TOP ENCLOSURE **25-1/2" HIGH**
SS 29 — DOUBLE SLOPE TOP ENCLOSURE **29-1/2" HIGH**

Note: List add will be 12% of total list price of materials tagged for tagging individual cartons with room numbers, floor, building, etc.

Available in Stainless Steel and Aluminum. Consult Factory.

VERSA-LINE ENCLOSURES AND ACCESSORIES

E - Flat Top Enclosure
X - Expanded Metal Enclosure
XC - Ceiling Expanded Metal Enclosure

ENCLOSURE LISTINGS
(Depth)
A=4-3/8"
B=5-5/16"

LIST PRICE SHOWN

STANDARD ENCLOSURE LENGTHS
2' thru 8' in 6" increments

SEE PAGE 2 & 3 FOR ROUGH-IN MATERIAL PRICES

FLAT TOP ENCLOSURES

Note: Enclosure prices **do not** include brackets, hangers or backplate

DESCRIPTION	JVA-E5		JVA-E11		VA-X5		VA-X11		VA-X17		VA-X3C	
	PRICE	*WT.*	*PRICE*	*WT.*	*PRICE*	*WT.*	*PRICE*	*WT.*	*PRICE*	*WT.*	*PRICE*	*WT.*
Enclosure 18 GA.	**$15.95/FT**	2.5	**$22.05/FT**	3.7	**$15.00/FT**	0.9	**$22.90/FT**	1.1	**$29.25/FT**	1.3	**$27.55/FT**	**1.0**
Enclosure 16 GA.	**17.50**	2.8	**23.85**	4.0								
Enclosure 14 GA.	**21.40**	3.2	**29.05**	4.4								
Baked Powder (standard colors)	**3.25**	-	**4.60**	-	**3.25**	-	**4.60**	-	**6.80**	-	**3.60**	**-**
Baked Metallic (standard colors)	**4.80**	-	**6.75**	-	**4.80**	-	**6.75**	-	**10.20**	-	**5.15**	**-**
Partial Backplate - 8' Lengths	**4.00**	0.4	**4.00**	0.4								
Water Brackets	**7.70/EA**	0.3	**8.85/EA**	0.3								
Wall Mounted B.B. Hanger					**7.25/EA**	0.4	**7.25/EA**	0.4	**7.25/EA**	0.4		
Ceiling Hanger											**8.25/EA**	**0.3**
Pipe & Cover Support					**8.25**	0.3	**8.25**	0.3	**8.25**	0.3		
Rigid Element Hanger					**4.65**	0.3	**4.65**	0.3	**4.65**	0.3		
3" End Cap	**21.90**	1.0	**24.30**	1.5	**15.00**	0.5	**20.75**	0.8	**22.55**	1.0	**20.25**	**2.3**
8-3/8" Wall Sleeve	**17.10**	1.2	**19.85**	1.7								
Wall Sleeve Support	**10.20**	0.2	**11.50**	0.3								
Inside Corner 90°	**52.15**	3.4	**61.70**	5.0	**30.35**	0.9	**33.30**	1.3	**37.95**	1.9		
Inside Corner 135°	**80.60**	3.7	**91.85**	6.4								
Outside Corner 90°	**48.15**	3.7	**56.40**	6.4	**32.20**	1.0	**36.50**	1.5	**39.65**	2.0		
Outside Corner 135°	**76.40**	4.0	**89.10**	6.9								
3" Splice Plate					**6.75**	0.5	**7.25**	0.5	**7.80**	0.8		

FLAT TOP ENCLOSURES

Note: Enclosure prices **do not** include brackets, hangers or backplate

DESCRIPTION	JVB-E6		JVB-E12		VB-X6		VB-X12		VB-X18		VB-X4C	
	PRICE	*WT.*	*PRICE*	*WT.*	*PRICE*	*WT.*	*PRICE*	*WT.*	*PRICE*	*WT.*	*PRICE*	*WT.*
Enclosure 18 GA.	**$17.35/FT**	2.5	**$22.85/FT**	3.7	**$15.40/FT**	0.9	**$23.55/FT**	1.1	**$30.05/FT**	1.3	**$28.55/FT**	1.0
Enclosure 16 GA.	**18.75**	2.8	**24.30**	4.0								
Enclosure 14 GA.	**23.00**	3.2	**29.80**	4.4								
Baked Powder (standard colors)	**3.40**	-	**4.65**	-	**3.40**	-	**4.65**	-	**7.15**	-	**3.70**	-
Baked Metallic (standard colors)	**5.00**	-	**6.80**	-	**5.00**	-	**6.80**	-	**10.65**	-	**5.40**	-
Partial Backplate - 8' Lengths	**4.00**	0.4	**4.00**	0.4								
Water Brackets	**7.80/EA**	0.3	**7.80/EA**	0.3								
Wall Mounted B.B. Hanger					**7.25/EA**	0.4	**7.25/EA**	0.4	**7.25/EA**	0.4		
Ceiling Hanger											**8.25/EA**	0.3
Pipe & Cover Support					**8.40**	0.3	**8.40**	0.3	**8.40**	0.3		
Rigid Element Hanger					**4.75**	0.3	**4.75**	0.3	**4.75**	0.3		
3" End Cap	**23.00**	1.0	**26.25**	1.5	**15.40**	0.5	**21.40**	0.8	**23.50**	1.0	**21.30**	2.5
8-3/8" Wall Sleeve	**17.55**	1.2	**20.35**	1.7								
Wall Sleeve Support	**10.25**	0.2	**11.70**	0.3								
Inside Corner 90°	**53.95**	3.4	**64.30**	5.0	**32.85**	0.9	**36.65**	1.3	**39.15**	1.9		
Inside Corner 135°	**84.65**	3.7	**96.75**	6.4								
Outside Corner 90°	**51.30**	3.7	**58.00**	6.4	**33.20**	1.0	**37.40**	1.5	**40.95**	2.0		
Outside Corner 135°	**78.50**	4.0	**91.35**	6.9								
3" Splice Plate					**7.25**	0.3	**7.50**	0.5	**8.00**	0.8		

Note: List add will be 12% of total list price of materials tagged for tagging individual cartons with room numbers, floor, building, etc.
For special colors consult factory
Available in Stainless Steel and Aluminum. Consult Factory.

LCS-10 ENCLOSURES AND ACCESSORIES

LCS-10 ENCLOSURES AND BACKPLATES AVAILABLE IN LENGTHS

2' thru 8' in 6" increments

B-610 MOUNTING STRIP SUPPLIED IN 8' LENGTHS

SEE PAGE 2 FOR ELEMENT PRICES

LIST PRICE SHOWN

LCS-10 ENCLOSURES

DESCRIPTION	*PRICE*	*WT.*
Enclosure 18 GA.	**$14.35/FT**	2.1
Enclosure 16 GA.	**16.60**	2.4
Baked Powder (standard colors)	**2.80**	–
Baked Metallic (standard colors)	**4.05**	–
B-610 Mounting Strip - 8' Lengths Only	**4.30**	1.5
Full Backplate	**10.60**	1.4
Bracket	**8.40/EA**	0.4
Adjustable Rod Hanger Upper with Clutch Nut	**7.25**	0.1
Adjustable Rod Hanger Lower with Clutch Nut	**7.25**	0.1
Slide Shoe – For R01, R02, R03 Element Only	**2.45**	0.1
8" Wall Sleeve w/Access Door, Return to Wall	**27.90**	1.0

Note: List add will be 12% of total list price of materials to be tagged for tagging individual cartons with room numbers, floor, building, etc.

Available in Stainless Steel and Aluminum. Consult Factory.

LCS-10 ACCESSORIES

DESCRIPTION	*PRICE*	*WT.*
3" End Cap	**$16.15/EA**	0.7
6" End Cap	**20.25**	0.8
6" End Cap w/Access Door	**25.65**	0.8
2" Splice Piece	**9.55**	0.2
3" Wall Sleeve	**11.75**	0.3
6" Wall Sleeve	**12.75**	0.6
14" Fill-In Section	**22.55**	1.2
Inside Corner 90°	**14.90**	0.3
Inside Corner 135°	**64.70**	0.3
Outside Corner 90°	**29.65**	0.9
Outside Corner 135°	**75.30**	0.9
8" Valve Compartment - Overlapping	**27.75**	1.0

LB-2 ENCLOSURES AND ACCESSORIES

LB2 ENCLOSURES AND BACKPLATES AVAILABLE IN THE FOLLOWING LENGTHS

2' thru 8' in 6" increments

SEE PAGE 2 FOR ELEMENT PRICES

LIST PRICE SHOWN

LB-2 ENCLOSURES

DESCRIPTION	*PRICE*	*WT.*
Enclosure 18 gauge (Does not include backplate or hgrs.)	**$14.55/FT**	2.0
Enclosure 16 gauge (Does not include backplate or hgrs.)	**15.75**	2.5
Enclosure 14 gauge (Does not include backplate or hgrs.)	**18.50**	3.0
Add for standard modulating damper	**6.80**	0.3
Add for tamper resistant modulating damper	**8.90**	0.3
Full Backplate 20 gauge	**10.25**	1.4
Partial Backplate - 8' Lengths	**4.00**	1.5
Baked Powder (Standard Colors)	**4.30**	-
Baked Metallic (Standard Colors)	**5.55**	-
Adjustable Hanger w/Clutch Nut (For Element or Return Pipe)	**7.25/EA**	0.1
Standard Rod Hanger	**4.60**	0.1
Intermediate Bottom Support w/Ball Bearings	**7.55**	0.2
Intermediate Bottom Support	**3.65**	0.2
Optional Gauging Tool (For Locating Bottom Support)	**4.35**	0.3

Note: List add will be 12% of total list price of materials to be tagged for tagging individual cartons with room numbers, floor, building, etc.

Available in Stainless Steel and Aluminum. Consult Factory.

LB-2 ACCESSORIES

DESCRIPTION	*PRICE*	*WT.*
2" End Cap	**$20.25/EA**	0.6
6" End Cap to floor	**22.65**	1.2
6" End Cap to floor w/Access Door	**29.85**	1.2
4" Wall Sleeve	**11.80**	0.9
6" Wall Sleeve	**13.10**	1.1
8-3/8" Wall Sleeve	**15.00**	1.3
8-3/8" Wall Sleeve w/Access Door	**21.60**	1.3
Wall Sleeve Support	**10.20**	0.4
Inside Corner 90°	**29.15**	0.9
Inside Corner 135°	**75.10**	1.3
Outside Corner 90°	**31.05**	1.3
Outside Corner 135°	**76.00**	1.7

“J” CLASSIC ENCLOSURES AND ACCESSORIES

AR - Architectural

ENCLOSURE LISTINGS
(Depth)
K=3-9/16"
A=4-3/8"
B=5-5/16"

J = Slip Jointed
D = Dial Damper
TPD =Tamper Resistant Damper
SD = Slide Damper (“B” only)

LIST PRICE SHOWN

STANDARD ENCLOSURE LENGTHS
2' thru 8' in 6" increments

SEE PAGE 2 & 3 FOR ROUGH-IN MATERIAL PRICES

“J” STYLE CLASSIC ENCLOSURES

Note: Enclosure prices **do not** include brackets, hangers or backplate

DESCRIPTION	JVK-AR11		JVA-AR7		JVA-AR14		JVB-AR7		JVB-AR14		JVB-AR20		JVB-AR24	
	PRICE	*WT.*	*PRICE*	*WT.*	*PRICE*	*WT.*	*PRICE*	*WT.*	*PRICE*	*WT.*	*PRICE*	*WT.*	*PRICE*	*WT.*
Enclosure 16 GA.	**$41.95/FT**	3.6	**$41.15/FT**	3.0	**$47.90/FT**	4.5	**$42.85/FT**	3.1	**$49.25/FT**	4.5	**$52.60/FT**	6.1	**$58.70/FT**	7.5
Enclosure 14 GA.	**47.05**	4.8	**45.25**	3.7	**53.15**	5.7	**47.05**	3.8	**54.60**	5.7	**58.60**	7.5	**65.20**	8.6
Baked Metallic (standard colors)	**1.90**	-	**1.75**	-	**2.55**	-	**1.75**	-	**2.55**	-	**2.70**	-	**3.15**	-
Dial Damper	**9.85**	0.5		-	**9.85**	0.5		-	**9.85**	0.5	**9.85**	0.5	**9.85**	0.5
Tamper Resistant Damper	**13.65**	0.5		-	**13.65**	0.5		-	**13.65**	0.5	**13.65**	0.5	**13.65**	0.5
Slide Damper (B offset only)		-		-		-	**16.15**	0.4	**16.15**	0.4	**16.15**	0.4	**16.15**	0.4
4" End Cap	**30.80/EA**	2.2	**30.35/EA**	1.7	**35.25/EA**	2.8	**31.70/EA**	1.8	**36.75/EA**	2.8	**41.15/EA**	3.9	**44.20/EA**	4.5
8-3/8" End Cap w/Access Door	**64.05**	3.5	**59.40**	2.9	**66.05**	4.0	**61.45**	3.0	**67.85**	4.0	**73.00**	5.1	**76.40**	5.7
4" Wall Sleeve	**20.65**	1.5	**17.60**	1.2	**21.60**	2.0	**18.60**	1.3	**22.05**	2.0	**27.05**	2.3	**29.35**	2.9
6" Wall Sleeve	**23.55**	1.8	**19.85**	1.8	**24.30**	2.3	**21.40**	1.9	**25.10**	2.3	**29.85**	2.9	**33.30**	3.4
8-3/8" Wall Sleeve	**26.45**	2.4	**21.35**	2.2	**27.55**	2.9	**23.35**	2.3	**28.30**	2.9	**33.30**	3.5	**37.55**	4.0
8-3/8" Wall Sleeve w/Access Door	**50.10**	2.6	**45.50**	2.8	**54.15**	3.1	**47.40**	2.5	**54.60**	3.1	**60.35**	3.8	**65.50**	4.2
Wall Sleeve Support	**9.85**	0.4	**9.15**	0.3	**9.55**	0.5	**9.95**	0.3	**9.85**	0.5	**11.25**	0.6	**12.40**	0.7
Inside Corner 90°	**74.50**	4.9	**73.15**	4.0	**86.95**	6.5	**75.05**	4.1	**89.70**	6.5	**110.65**	6.9	**127.35**	8.4
Inside Corner 135°	**95.90**	5.5	**96.15**	4.4	**111.25**	7.0	**98.80**	4.5	**113.60**	7.0	**134.15**	7.5	**154.80**	9.0
Outside Corner 90°	**71.00**	5.5	**66.60**	5.0	**82.35**	7.0	**68.50**	5.1	**84.75**	7.0	**98.90**	7.5	**122.10**	9.0
Outside Corner 135°	**95.85**	6.0	**96.20**	5.4	**104.70**	7.5	**99.90**	5.5	**107.80**	7.5	**122.25**	8.0	**155.25**	9.5
12" Valve Compartment 16 GA.	**80.00**	4.1	**81.55**	3.7	**83.15**	5.1	**85.60**	3.7	**86.80**	5.1	**102.35**	6.7	**113.40**	8.1
12" Valve Compartment 14 GA.	**83.65**	5.4	**85.20**	4.5	**86.75**	6.3	**91.05**	4.4	**88.85**	6.3	**110.10**	8.1	**120.25**	9.2
18" Valve Compartment 16 GA.	**134.35**	6.1	**86.50**	5.6	**140.85**	7.6	**90.25**	5.6	**144.90**	7.6	**163.45**	10.0	**181.80**	12.1
18" Valve Compartment 14 GA.	**141.95**	8.1	**92.00**	6.6	**148.75**	9.4	**95.70**	6.6	**153.20**	9.4	**171.95**	12.1	**188.55**	12.8

Standard product is clear anodized grille with enclosure fronts baked powder finish in any of standard colors shown in Mestek Color Selector.
Grille and enclosure painted same color at no extra charge.
No deduction is allowed for prime coat.
Extruded aluminum grille furnished in standard baked powder for two tone effect add $3.80 List per ft.

Note: List add will be 12% of total list price of materials tagged for tagging individual cartons with room numbers, floor, building, etc.
All accessories overlap the enclosures.

Available in Stainless Steel and Aluminum. Consult Factory.

STANDARD CLASSIC ENCLOSURES AND ACCESSORIES

AR - Architectural

ENCLOSURE LISTINGS
(Depth)
K=3-9/16"
A=4-3/8"
B=5-5/16"

V= Wiped Edge
D = Dial Damper
SD = Slide Damper ("B" only)
TPD = Tamper Resistant Damper

LIST PRICE SHOWN

STANDARD ENCLOSURE LENGTHS
2' thru 8' in 6" increments

SEE PAGE 2 & 3 FOR ROUGH-IN MATERIAL PRICES

STANDARD CLASSIC ENCLOSURES

Note: Enclosure prices **do not** include brackets, hangers or backplate

DESCRIPTION	VK-AR11		VA-AR7		VA-AR14		VB-AR7		VB-AR14		VB-AR20		VB-AR24	
	PRICE	*WT.*	*PRICE*	*WT.*	*PRICE*	*WT.*	*PRICE*	*WT.*	*PRICE*	*WT.*	*PRICE*	*WT.*	*PRICE*	*WT.*
Enclosure 16 GA.	**$43.25/FT**	3.5	**$42.10/FT**	3.0	**$49.20/FT**	4.5	**$44.00/FT**	3.1	**$50.35/FT**	4.5	**$53.35/FT**	6.1	**$60.60/FT**	7.5
Enclosure 14 GA.	**48.15**	4.8	**46.40**	3.7	**54.20**	5.9	**48.25**	3.8	**56.05**	5.9	**59.30**	7.5	**67.30**	8.6
Baked Metallic (standard colors)	**1.90**	-	**1.75**	-	**2.55**	-	**1.75**	-	**2.55**	-	**2.70**	-	**3.15**	-
Dial Damper	**9.85**	0.5		-	**9.85**	0.5		-	**9.85**	0.5	**9.85**	0.5	**9.85**	0.5
Tamper Resistant Damper	**13.65**	0.5		-	**13.65**	0.5		-	**13.65**	0.5	**13.65**	0.5	**13.65**	0.5
Slide Damper (B offset only)		-		-		-	**16.15**	0.4	**16.15**	0.4	**16.15**	0.4	**16.15**	0.4
4" End Cap (VK = 3" End Cap)	**24.70/EA**	1.5	**30.35/EA**	1.7	**32.20/EA**	2.8	**31.70/EA**	1.8	**34.80/EA**	2.8	**39.75/EA**	3.9	**43.55/EA**	4.5
8-3/8" End Cap w/Access Door	**61.10**	3.4	**62.55**	2.9	**73.00**	4.0	**64.90**	3.0	**75.05**	4.0	**81.90**	5.1	**88.35**	5.7
2" Wall Sleeve	**22.25**	1.0	**19.55**	0.3	**24.50**	1.5	**19.95**	0.7	**25.85**	1.6	**27.10**	1.9	**30.20**	2.1
4" Wall Sleeve	**23.70**	1.5	**21.80**	1.2	**26.25**	2.0	**22.65**	1.3	**26.90**	2.0	**29.80**	2.3	**33.85**	2.9
6" Wall Sleeve	**26.25**	1.8	**25.75**	1.8	**30.95**	2.3	**27.05**	1.9	**31.20**	2.3	**33.60**	2.9	**36.15**	3.4
8-3/8" Wall Sleeve	**29.65**	2.4	**27.05**	2.2	**32.05**	2.9	**29.05**	2.3	**32.90**	2.9	**36.50**	3.5	**41.60**	4.0
8-3/8 "Wall Sleeve w/Access Door	**56.25**	2.5	**53.25**	2.8	**67.80**	3.0	**55.15**	2.9	**69.15**	3.0	**75.05**	3.6	**82.35**	4.1
Inside Corner 90°	**76.35**	4.9	**73.15**	4.0	**87.50**	6.5	**75.05**	4.1	**91.60**	6.5	**106.60**	6.9	**126.85**	8.4
Inside Corner 135°	**94.50**	5.5	**100.40**	4.4	**106.60**	7.0	**103.30**	4.5	**109.65**	7.0	**127.75**	7.5	**149.60**	9.0
Outside Corner 90°	**73.00**	5.5	**66.60**	5.0	**82.35**	7.0	**68.50**	5.1	**84.75**	7.0	**96.10**	7.5	**116.00**	9.3
Outside Corner 135°	**95.85**	6.0	**93.35**	5.4	**103.00**	7.5	**96.90**	5.5	**106.20**	7.5	**124.35**	8.0	**150.60**	9.5
12" Valve Compartment 16 GA.	**88.35**	4.2	**81.55**	3.0	**83.15**	4.5	**85.60**	3.1	**86.80**	4.5	**102.35**	6.1	**113.40**	7.5
12" Valve Compartment 14 GA.	**95.00**	5.4	**85.20**	3.7	**86.75**	5.9	**91.05**	3.8	**88.85**	5.9	**110.10**	7.5	**120.25**	8.6
18" Valve Compartment 16 GA.	**134.35**	6.0	**86.50**	4.5	**140.85**	7.3	**90.25**	4.6	**144.90**	7.3	**163.45**	9.0	**181.80**	11.0
18" Valve Compartment 14 GA.	**141.95**	6.6	**92.00**	6.4	**148.75**	8.9	**95.70**	5.0	**153.20**	8.9	**171.95**	10.5	**191.60**	12.5

Standard product is clear anodized grille with enclosure fronts baked powder finish in any of standard colors shown in Mestek Color Selector.
Grille and enclosure painted same color at no extra charge.
No deduction is allowed for prime coat.
Extruded aluminum grille furnished in standard baked powder for two tone effect add $3.80 List per ft.

Note: List add will be 12% of total list price of materials tagged for tagging individual cartons with room numbers, floor, building, etc.
All accessories underlap the enclosures.

Available in Aluminum. Consult Factory.

“J” CLASSIC
LOUVERED INLET TO THE FLOOR
ENCLOSURES AND ACCESSORIES

AR - Architectural

ENCLOSURE LISTINGS
(Depth)
A=4-3/8"
B=5-5/16"

J = Slip Jointed
SD = Slide Damper (“B” only)

LIST PRICE SHOWN

STANDARD ENCLOSURE LENGTHS
2' thru 8' in 6" increments

SEE PAGE 2 & 3 FOR ROUGH-IN MATERIAL PRICES

“J” STYLE CLASSIC LOUVERED INLET TO THE FLOOR

Note: Enclosure prices **do not** include brackets, hangers, backplate, or floor angle.

DESCRIPTION	JVA-AR10LI		JVB-AR10LI	
	PRICE	*WT.*	*PRICE*	*WT.*
Enclosure 16 GA.	**$ 43.35/FT**	3.5	**$ 44.70/FT**	3.7
Enclosure 14 GA.	**47.20**	4.3	**48.90**	4.5
Baked Metallic (standard colors)	**2.00**	-	**2.00**	-
Slide Damper (B offset only)		-	**16.15**	0.4
4" End Cap	**31.50/EA**	2.2	**32.90/EA**	2.2
8-3/8" End Cap w/Access Door	**61.65**	3.3	**63.15**	3.5
4" Wall Sleeve	**18.65**	1.6	**20.10**	1.8
6" Wall Sleeve	**20.95**	2.2	**22.55**	2.4
8-3/8" Wall Sleeve	**25.80**	2.6	**26.90**	2.8
8-3/8" Wall Sleeve w/Access Door	**48.25**	2.8	**48.80**	3.0
Wall Sleeve Support	**9.70**	0.6	**10.05**	0.8
Inside Corner 90°	**75.55**	4.4	**78.50**	4.5
Inside Corner 135°	**95.40**	4.8	**98.20**	5.0
Outside Corner 90°	**71.50**	5.4	**74.50**	5.5
Outside Corner 135°	**91.45**	5.8	**99.20**	6.0
18" Valve Compartment 16 GA.	**89.35**	5.0	**90.30**	5.2
18" Valve Compartment 14 GA.	**93.40**	5.3	**95.40**	5.5

BACKPLATE AND FLOOR ANGLE

CATALOG NUMBER	DESCRIPTION	PRICE	WT.
FBP-10	10" Full Backplate - Unpainted Galv	**$11.50/FT**	1.2
FBP-10	10" Full Backplate - Painted CRS	**13.20**	1.2
EAFA	Extruded Aluminum Floor Angle - 8' lengths - Unpainted	**8.85**	0.3
EAFA	Extruded Aluminum Floor Angle - 8' lengths - Baked Powder (Standard Colors)	**11.55**	0.3
EAFA	Extruded Aluminum Floor Angle - 8' lengths - Baked Metallic (Standard Colors)	**15.45**	0.3

Standard product is clear anodized grille with enclosure fronts baked powder finish in any standard colors shown in Mestek Color Selector.
Grille and enclosure painted same color at no extra charge.
No deduction is allowed for prime coat.
Extruded aluminum grille furnished in standard baked powder for two tone effect add $3.80 List per ft.

Note: List add will be 12% of total list price of materials tagged for tagging individual cartons with room numbers, floor, building, etc.
All accessories overlap the enclosure.

Available in Stainless Steel and Aluminum. Consult Factory.

STANDARD CLASSIC LOUVERED INLET TO THE FLOOR ENCLOSURES AND ACCESSORIES

AR - Architectural

ENCLOSURE LISTINGS
(Depth)
A=4-3/8"
B=5-5/16"

V=Wiped Edge
SD = Slide Damper ("B" only)

LIST PRICE SHOWN

STANDARD ENCLOSURE LENGTHS
2' thru 8' in 6" increments

SEE PAGE 2 & 3 FOR ROUGH-IN MATERIAL PRICES

STANDARD CLASSIC LOUVERED INLET TO THE FLOOR

Note: Enclosure prices **do not** include brackets, hangers, backplate, or floor angle.

DESCRIPTION	VA-AR10LI		VB-AR10LI	
	PRICE	*WT.*	*PRICE*	*WT.*
Enclosure 16 GA.	**$ 47.65/FT**	3.5	**$ 49.20/FT**	3.7
Enclosure 14 GA.	**52.30**	4.3	**53.90**	4.5
Baked Metallic (standard colors)	**2.10**	-	**2.10**	-
Slide Damper (B offset only)		-	**16.15**	0.4
4" End Cap	**32.15/EA**	2.2	**33.40/EA**	2.2
8-3/8" End Cap w/Access Door	**63.80**	3.3	**65.85**	3.5
4" Wall Sleeve	**23.70**	1.6	**24.70**	1.8
6" Wall Sleeve	**24.70**	2.2	**27.95**	2.4
8-3/8" Wall Sleeve	**29.95**	2.6	**30.95**	2.8
8-3/8" Wall Sleeve w/Access Door	**56.40**	2.8	**58.50**	3.0
Inside Corner 90°	**77.25**	4.4	**80.45**	4.5
Inside Corner 135°	**98.10**	4.8	**102.25**	5.0
Outside Corner 90°	**77.25**	5.4	**78.30**	5.5
Outside Corner 135°	**98.10**	5.8	**100.20**	6.0
18" Valve Compartment 16 GA.	**91.55**	5.0	**93.40**	5.2
18" Valve Compartment 14 GA.	**94.85**	5.3	**101.75**	5.5

BACKPLATE AND FLOOR ANGLE

CATALOG NUMBER	DESCRIPTION	PRICE	WT.
FBP-10	10" Full Backplate - Unpainted Galv	**$11.50/FT**	1.2
FBP-10	10" Full Backplate - Painted CRS	**13.20**	1.2
EAFA	Extruded Aluminum Floor Angle - 8' lengths - Unpainted	**8.85**	0.3
EAFA	Extruded Aluminum Floor Angle - 8' lengths - Baked Powder (Standard Colors)	**11.55**	0.3
EAFA	Extruded Aluminum Floor Angle - 8' lengths - Baked Metallic (Standard Colors)	**15.45**	0.3

Standard product is clear anodized grille with enclosure fronts baked powder finish in any standard colors shown in Mestek Color Selector.
Grille and enclosure painted same color at no extra charge.
No deduction is allowed for prime coat.
Extruded aluminum grille furnished in standard baked powder for two tone effect add $3.80 List per ft.

Note: List add will be 12% of total list price of materials tagged for tagging individual cartons with room numbers, floor, building, etc.
All accessories underlap the enclosure.

Available in Aluminum. Consult Factory.

“J” CLASSIC SLOPE TOP ENCLOSURES AND ACCESSORIES

ARS - Architectural Slope

ENCLOSURE LISTINGS
(Depth)
A=4-3/8"

J =Slip Jointed

LIST PRICE SHOWN

STANDARD ENCLOSURE LENGTHS
2' thru 8' in 6" increments

SEE PAGE 2 & 3 FOR ROUGH-IN MATERIAL PRICES

“J” STYLE CLASSIC SLOPE TOP ENCLOSURES

Note: Enclosure prices **do not** include brackets, hangers or backplate

DESCRIPTION	JVA-ARS11		JVA-ARS14	
	PRICE	*WT.*	*PRICE*	*WT.*
Enclosure 16 GA.	**$ 45.65/FT**	4.3	**$ 47.90/FT**	4.3
Enclosure 14 GA.	**50.60**	5.5	**53.15**	5.5
Baked Metallic (standard colors)	**2.45**	-	**2.60**	-
Knob Damper		-		-
3" End Cap	**30.75/EA**	1.4	**32.20/EA**	2.0
8-3/8" End Cap w/Access Door	**60.35**	2.5	**62.25**	3.2
4" Wall Sleeve	**21.30**	1.2	**21.60**	1.5
6" Wall Sleeve	**22.85**	1.6	**23.00**	2.3
8-3/8" Wall Sleeve	**25.85**	2.2	**26.10**	3.0
8-3/8" Wall Sleeve w/Access Door	**48.30**	2.3	**48.55**	3.0
Wall Sleeve Support	**9.95**	2.0	**11.50**	0.3
Inside Corner 90°	**75.85**	4.9	**76.35**	6.5
Inside Corner 135°	**102.55**	5.0	**103.40**	6.7
Outside Corner 90°	**83.55**	5.4	**84.45**	7.0
Outside Corner 135°	**106.95**	6.2	**116.65**	7.8
12" Valve Compartment 16 GA.	**77.50**	3.8	**83.15**	4.9
12" Valve Compartment 14 GA.	**81.90**	4.5	**86.75**	5.6

Standard product is clear anodized grille with enclosure fronts baked powder finish in any standard colors shown in Mestek Color Selector.
Grille and enclosure painted same color at no extra charge.
No deduction is allowed for prime coat.
Extruded aluminum grille furnished in standard baked powder for two tone effect add $3.80 List per ft.

Note: List add will be 12% of total list price of materials tagged for tagging individual cartons with room numbers, floor, building, etc.
All accessories overlap the enclosure.

Available in Stainless Steel and Aluminum. Consult Factory.

“J” CLASSIC SLOPE TOP ENCLOSURES AND ACCESSORIES

ARS - Architectural Slope

ENCLOSURE LISTINGS
(Depth)
B=5-5/16"

J =Slip Jointed

LIST PRICE SHOWN

STANDARD ENCLOSURE LENGTHS
2' thru 8' in 6" increments

SEE PAGE 2 & 3 FOR ROUGH-IN MATERIAL PRICES

“J” STYLE CLASSIC SLOPE TOP ENCLOSURES

Note: Enclosure prices **do not** include brackets, hangers or backplate

DESCRIPTION	JVB-ARS14		JVB-ARS20		JVB-ARS24		JVB-ARS30		JVB-ARS36	
	PRICE	*WT.*	*PRICE*	*WT.*	*PRICE*	*WT.*	*PRICE*	*WT.*	*PRICE*	*WT.*
Enclosure 16 GA.	**$ 49.25/FT**	4.3	**$ 52.60/FT**	5.9	**$ 58.70/FT**	7.3	**$ 73.60/FT**	8.9	**$ 80.15/FT**	10.5
Enclosure 14 GA.	**54.60**	5.5	**63.35**	7.3	**65.20**	8.4	**80.65**	10.2	**88.15**	12.0
Baked Metallic (standard colors)	**2.80**	-	**2.90**	-	**3.00**	-	**3.15**	-	**3.30**	-
Knob Damper		-		-		-		-		-
3" End Cap	**33.35/EA**	2.0	**39.00/EA**	2.6	**46.70/EA**	3.6	**50.25/EA**	4.5	**61.10/EA**	5.4
8-3/8" End Cap w/Access Door	**64.70**	3.2	**74.10**	4.3	**85.15**	5.5	**95.40**	7.4	**99.95**	8.8
4" Wall Sleeve	**23.85**	1.5	**28.30**	1.9	**33.25**	2.0	**38.85**	2.5	**40.10**	2.8
6" Wall Sleeve	**24.05**	2.3	**30.45**	2.7	**35.55**	3.0	**42.60**	3.6	**44.60**	4.0
8-3/8" Wall Sleeve	**27.10**	3.0	**33.25**	3.3	**38.70**	4.2	**49.05**	4.8	**52.10**	5.5
8-3/8" Wall Sleeve w/Access Door	**49.60**	3.0	**54.60**	3.3	**64.70**	4.5	**75.35**	4.8	**78.70**	5.5
Wall Sleeve Support	**11.90**	0.3	**13.85**	0.4	**15.55**	0.5	**25.85**	0.7	**26.35**	0.9
Inside Corner 90°	**80.00**	6.5	**94.10**	7.4	**126.90**	8.0	**177.15**	9.1	**191.00**	10.1
Inside Corner 135°	**105.60**	6.7	**120.55**	7.8	**145.40**	8.7	**165.65**	9.8	**177.80**	10.9
Outside Corner 90°	**100.45**	7.0	**123.80**	8.0	**149.35**	9.3	**177.15**	10.3	**191.00**	11.3
Outside Corner 135°	**121.20**	7.8	**144.20**	8.6	**166.25**	9.9	**165.65**	11.0	**177.80**	12.1
12" Valve Compartment 16 GA.	**86.80**	4.9	**102.35**	6.2	**113.40**	7.3	**129.40**	9.2	**134.10**	10.8
12" Valve Compartment 14 GA.	**88.85**	5.6	**110.10**	6.5	**120.25**	8.6	**136.20**	10.5	**142.00**	12.4

Standard product is clear anodized grille with enclosure fronts baked powder finish in any standard colors shown in Mestek Color Selector.
Grille and enclosure painted same color at no extra charge.
No deduction is allowed for prime coat.
Extruded aluminum grille furnished in standard baked powder for two tone effect add $3.80 List per ft.

Note: List add will be 12% of total list price of materials tagged for tagging individual cartons with room numbers, floor, building, etc.
All accessories overlap the enclosure.

Available in Stainless Steel and Aluminum. Consult Factory.

“J” CLASSIC “ARPM” ENCLOSURES AND ACCESSORIES

AR - Architectural

ENCLOSURE LISTINGS
(Depth)
B-ARPM=6-1/16"
B-AR2PM=10-5/16"

J = Slip Jointed
Overlapping Accessories
SD = Slide Damper (“B” only)

LIST PRICE SHOWN

STANDARD ENCLOSURE LENGTHS
2' thru 8' in 6" increments

SEE PAGE 2 & 3 FOR ROUGH-IN MATERIAL PRICES

“J” PEDESTAL MOUNT ASSEMBLY OVERLAPPING ACCESSORIES

DESCRIPTION	JVB-ARPM		JVB-AR2PM	
	PRICE	*WT.*	*PRICE*	*WT.*
Enclosure 16 GA.	**$ 56.40/FT**	5.0	**$ 78.45/FT**	6.0
Enclosure 14 GA.	**74.10**	6.3	**83.30**	7.3
Baked Metallic (standard colors)	**2.20**	-	**2.45**	-
Support Bracket Assembly (Maximum 3' on center)	**37.65/EA**	2.0	**60.50/EA**	2.4
Cradle #6A (For Use With Return Pipe - See Catalog)	**3.80**	0.1	**7.60**	0.2
3" End Cap	**49.45**	2.0	**122.85**	3.0
4" Wall Sleeve	**28.15**	1.9	**68.75**	2.8
6" Wall Sleeve	**29.35**	2.5	**75.05**	3.0
8-3/8" Wall Sleeve	**30.95**	3.0	**78.85**	3.5
8-3/8" Wall Sleeve w/Access Door	**92.85**	3.3		-
Wall Sleeve Support	**19.75**	0.8	**22.65**	1.4
Inside Corner or Outside Corner 90°	**187.80**	8.0	**270.00**	12.0
Inside Corner or Outside Corner 135°	**218.70**	9.3	**325.40**	13.0
Slide Damper	**16.15**	0.4	CONSULT FACTORY	

ARPM — 1 ROW FREE STANDING ENCLOSURE 6-3/4" HIGH
AR2PM — 2 ROW FREE STANDING ENCLOSURE 6-3/4" HIGH

Standard product is clear anodized grille with enclosure painted baked powder finish colors from standard color chart.
Grille and enclosure painted same color at no extra charge. No deduction is allowed for prime coat.
Extruded aluminum grille with different color finish for two tone effect, add $3.80 List per ft.

Note: List add will be 12% of total list price of materials that are to have individual carton information like floor number, room number, etc. shown.

Available in Stainless Steel and Aluminum. Consult Factory.

CLASSIC "ARPM" ENCLOSURES AND ACCESSORIES

AR - Architectural

ENCLOSURE LISTINGS
(Depth)
B-ARPM=6-1/16"
B-AR2PM=10-5/16"

V = Wiped Edge
SD = Slide Damper ("B" only)

UNDERLAPPING ACCESSORIES

LIST PRICE SHOWN

STANDARD ENCLOSURE LENGTHS
2' thru 8' in 6" increments

SEE PAGE 2 & 3 FOR ROUGH-IN MATERIAL PRICES

PEDESTAL MOUNT ASSEMBLY UNDERLAPPING ACCESSORIES

DESCRIPTION	VB-ARPM		VB-AR2PM	
	PRICE	*WT.*	*PRICE*	*WT.*
Enclosure 16 GA.	**$ 54.25/FT**	5.0	**$ 75.70/FT**	6.0
Enclosure 14 GA.	**71.35**	6.3	**80.10**	7.3
Baked Metallic (standard colors)	**2.20**	-	**2.45**	-
Support Bracket Assembly (Maximum 3' on center)	**37.65/EA**	2.0	**60.50/EA**	2.4
Cradle #6A (For Use With Return Pipe - See Catalog)	**3.80**	0.1	**7.60**	0.2
3" End Cap	**47.85**	2.0	**118.40**	3.0
4" Wall Sleeve	**26.95**	1.9	**66.30**	2.8
6" Wall Sleeve	**28.25**	2.5	**72.15**	3.0
8-3/8" Wall Sleeve	**29.85**	3.0	**75.90**	3.5
8-3/8" Wall Sleeve w/Access Door	**89.50**	3.3		-
Wall Sleeve Support	**19.75**	0.8	**22.65**	1.4
Inside Corner or Outside Corner 90°	**181.00**	8.0	**260.20**	12.0
Inside Corner or Outside Corner 135°	**212.25**	9.3	**313.35**	13.0
Slide Damper	**16.15**	0.4	CONSULT FACTORY	

ARPM — 1 ROW FREE STANDING ENCLOSURE 6-3/4" HIGH
AR2PM — 2 ROW FREE STANDING ENCLOSURE 6-3/4" HIGH

Standard product is clear anodized grille with enclosure fronts baked powder finish in any of the standard colors shown on Mestek Color Selector.
Grille and enclosure painted same color at no extra charge. No deduction is allowed for prime coat.
Extruded aluminum grille furnished in standard baked powder for two tone effect, add $3.80 List per ft.

Note: List add will be 12% of total list price of materials tagged for tagging individual cartons with room numbers, floor, building, etc. All accessories underlap the enclosures.

Available in Aluminum. Consult Factory.

“J” CLASSIC DOUBLE SLOPE TOP ENCLOSURES AND ACCESSORIES

ARSS - Architectural Double Slope

ENCLOSURE LISTINGS
(Depth)
B=5-5/16"

J = Slip Jointed

LIST PRICE SHOWN

STANDARD ENCLOSURE LENGTHS
2' thru 8' in 6" increments

SEE PAGE 2 & 3 FOR ROUGH-IN MATERIAL PRICES

“J” STYLE CLASSIC DOUBLE SLOPE TOP ENCLOSURES

Note: Enclosure prices **do not** include brackets, hangers or backplate

DESCRIPTION	JVB-ARSS19		JVB-ARSS25		JVB-ARSS29	
	PRICE	*WT.*	*PRICE*	*WT.*	*PRICE*	*WT.*
Enclosure 16 GA.	**$84.45/FT**	5.8	**$97.00/FT**	6.5	**$106.40/FT**	7.9
Enclosure 14 GA.	**89.75**	7.2	**102.65**	8.1	**111.85**	9.8
Baked Metallic (standard colors)	**5.75**	-	**6.05**	-	**6.20**	-
Knob Damper		-		-		-
Backplate 20 GA. Galvannealed (Full Height) Unpainted	**15.40**	2.7	**19.05**	3.4	**22.45**	3.9
Backplate 20 GA. CRS (Full Height) Baked Enamel	**18.30**	2.7	**22.65**	3.4	**26.85**	3.9
Vertical Wall Bracket	**7.15/EA**	0.5	**7.55/EA**	0.6	**8.25/EA**	0.7
Ball Bearing Hanger - Bracket Mounted	**7.25**	0.5	**7.25**	0.5	**7.25**	0.5
3" End Cap	**51.80**	3.0	**60.05**	3.7	**65.20**	4.2
9" End Cap w/Access Door	**89.50**	5.6	**99.00**	6.6	**106.60**	7.3
4" Wall Sleeve	**31.20**	1.4	**36.95**	1.8	**41.85**	2.0
9" Wall Sleeve	**39.15**	3.0	**45.15**	3.6	**49.50**	4.2
9" Wall Sleeve w/Access Door	**62.85**	4.3	**73.00**	4.9	**76.40**	5.5
Wall Sleeve Support	**22.45**	1.5	**24.70**	1.9	**26.90**	2.3
Inside Corner 90°	**115.85**	6.8	**134.00**	8.0	**156.65**	8.8
Inside Corner 135°	**139.45**	7.0	**158.10**	8.2	**181.95**	10.0
Outside Corner 90°	**130.15**	8.8	**164.85**	11.2	**178.70**	12.8
Outside Corner 135°	**153.65**	9.0	**188.50**	11.4	**203.00**	13.0

ARSS 19 — DOUBLE SLOPE TOP ENCLOSURE **19-1/2" HIGH**
ARSS 25 — DOUBLE SLOPE TOP ENCLOSURE **25-1/2" HIGH**
ARSS 29 — DOUBLE SLOPE TOP ENCLOSURE **29-1/2" HIGH**

Standard product is clear anodized grille with enclosure fronts baked powder finish in any standard colors shown in Mestek Color Selector.
Grille and enclosure painted same color at no extra charge.
No deduction is allowed for prime coat.
Extruded aluminum grille furnished in standard baked powder for two tone effect add $3.80 List per ft.

Note: List add will be 12% of total list price of materials tagged for tagging individual cartons with room numbers, floor, building, etc.
All accessories overlap the enclosure.

Available in Stainless Steel and Aluminum. Consult Factory.

DURA-VANE II
ENCLOSURES AND ACCESSORIES

ENCLOSURE LISTINGS
(Depth)
A=4-3/8"
B=5-5/16"

J =Slip Jointed

LIST PRICE SHOWN

STANDARD ENCLOSURE LENGTHS
2' thru 8' in 6" increments

SEE PAGE 2 & 3 FOR ROUGH-IN MATERIAL PRICES

DURA-VANE II "JDVA" & "JDVB" STYLE ENCLOSURES AND ACCESSORIES

Note: Enclosure prices **do not** include brackets, hangers or backplate

DESCRIPTION	JDVA 14		JDVA 20		JDVA 24		JDVB 14		JDVB 20		JDVB 24	
	PRICE	*WT.*	*PRICE*	*WT.*	*PRICE*	*WT.*	*PRICE*	*WT.*	*PRICE*	*WT.*	*PRICE*	*WT.*
Enclosure 16 GA.	**$57.65/FT**	4.5	**$63.45/FT**	6.1	**$74.75/FT**	7.5	**$59.20/FT**	4.5	**$64.85/FT**	6.1	**$77.25/FT**	7.5
Enclosure 14 GA.	**63.80**	5.7	**69.75**	7.5	**82.20**	8.6	**65.70**	5.7	**72.00**	7.5	**85.10**	8.6
Baked Metallic (standard colors)	**2.55**	-	**2.70**	-	**3.15**	-	**2.55**	-	**2.70**	-	**3.15**	-
4" End Cap	**35.25/EA**	2.8	**41.15/EA**	3.9	**44.20/EA**	4.5	**36.75/EA**	2.8	**41.15/EA**	3.9	**44.20/EA**	4.5
8-3/8" End Cap w/Access Door	**66.05**	4.0	**73.00**	5.1	**75.85**	5.7	**67.85**	4.0	**73.00**	5.1	**76.40**	5.7
4" Wall Sleeve	**21.60**	2.0	**27.05**	2.3	**29.35**	2.9	**22.05**	2.0	**27.05**	2.3	**29.35**	2.9
6" Wall Sleeve	**24.30**	2.3	**29.85**	2.9	**33.30**	3.4	**25.10**	2.3	**29.85**	2.9	**33.30**	3.4
8-3/8" Wall Sleeve	**27.55**	2.9	**33.30**	3.5	**37.55**	4.0	**28.30**	2.9	**33.30**	3.5	**37.55**	4.0
8-3/8" Wall Sleeve w/Access Door	**54.15**	3.1	**60.35**	3.8	**65.50**	4.2	**54.60**	3.1	**60.35**	3.8	**65.50**	4.2
Wall Sleeve Support	**9.55**	0.5	**11.25**	0.6	**12.40**	0.7	**9.85**	0.5	**11.25**	0.6	**12.40**	0.7
Inside Corner 90°	**86.95**	6.5	**110.65**	6.9	**127.35**	8.4	**89.70**	6.5	**111.25**	6.9	**127.35**	8.4
Inside Corner 135°	**111.25**	7.0	**134.15**	7.5	**154.80**	9.0	**113.60**	7.0	**134.15**	7.5	**154.80**	9.0
Outside Corner 90°	**82.35**	7.0	**98.90**	7.5	**122.10**	9.0	**84.75**	7.0	**98.90**	7.5	**122.10**	9.0
Outside Corner 135°	**104.70**	7.5	**122.25**	8.0	**155.25**	9.5	**107.80**	7.5	**122.25**	8.0	**155.25**	9.5
12" Valve Compartment 16 GA.	**87.10**	5.1	**107.20**	6.7	**118.80**	8.1	**90.95**	5.1	**107.20**	6.7	**118.80**	8.1
12" Valve Compartment 14 GA.	**90.90**	6.3	**115.35**	8.1	**125.95**	9.2	**93.10**	6.3	**115.35**	8.1	**125.95**	9.2
18" Valve Compartment 16 GA.	**114.20**	7.7	**125.60**	10.1	**134.15**	12.2	**117.85**	8.0	**129.00**	10.4	**140.90**	12.5
18" Valve Compartment 14 GA.	**119.10**	9.5	**132.65**	12.2	**142.65**	13.8	**123.00**	9.8	**135.95**	12.5	**149.30**	14.1

DURA-VANE II "JDVA 7" & "JDVB 7" STYLE ENCLOSURES AND ACCESSORIES

Note: Enclosure prices **do not** include brackets, hangers or backplate

DESCRIPTION	JDVA 7		JDVB 7	
	PRICE	*WT.*	*PRICE*	*WT.*
Enclosure 16 GA.	**$46.55/FT**	3.0	**$48.25/FT**	3.1
Enclosure 14 GA.	**50.85**	3.7	**52.75**	3.8
Baked Metallic (standard colors)	**1.75**	-	**1.75**	-
4" End Cap	**30.35/EA**	1.7	**31.70/EA**	1.8
8-3/8" End Cap w/Access Door	**59.40**	2.9	**61.45**	3.0
4" Wall Sleeve	**17.60**	1.2	**18.60**	1.3
6" Wall Sleeve	**19.85**	1.8	**21.40**	1.9
8-3/8" Wall Sleeve	**21.35**	2.2	**23.35**	2.3
8-3/8" Wall Sleeve w/Access Door	**45.50**	2.8	**47.40**	2.5
Wall Sleeve Support	**9.15**	0.3	**9.95**	0.3
Inside Corner 90°	**73.15**	4.0	**75.05**	4.1
Inside Corner 135°	**96.15**	4.4	**98.80**	4.5
Outside Corner 90°	**66.60**	5.0	**68.50**	5.1
Outside Corner 135°	**96.20**	5.4	**99.90**	5.5
12" Valve Compartment 16 GA.	**71.10**	3.0	**73.15**	3.1
12" Valve Compartment 14 GA.	**72.55**	4.3	**75.45**	3.3
18" Valve Compartment 16 GA.	**90.60**	4.5	**94.55**	4.6
18" Valve Compartment 14 GA.	**96.40**	6.4	**100.25**	5.0

Standard product is clear anodized grille with enclosure fronts baked powder finish in any standard colors shown in Mestek Color Selector.
Grille and enclosure painted same color at no extra charge.
No deduction is allowed for prime coat.

Note: List add will be 12% of total list price of materials tagged for tagging individual cartons with room numbers, floor, building, etc.
All accessories overlap the enclosure.

Available in Stainless Steel and Aluminum. Consult Factory.

DURA-VANE II
ENCLOSURES AND ACCESSORIES

J = Slip Jointed

ENCLOSURE LISTINGS
(Depth)
A=4-5/8"
B=5-9/16"

STANDARD ENCLOSURE LENGTHS
2' thru 8' in 6" increments

LIST PRICE SHOWN

SEE PAGE 2 & 3 FOR ROUGH-IN MATERIAL PRICES

DURA-VANE II "JDVA 10" & "JDVB 10" STYLE LOUVERED INLET TO THE FLOOR

Note: Enclosure prices **do not** include brackets, hangers, backplate or floor angle

DESCRIPTION	JDVA 10LI		JDVB 10LI	
	PRICE	*WT.*	*PRICE*	*WT.*
Enclosure 16 GA.	**$ 51.60/FT**	3.5	**$ 54.10/FT**	3.7
Enclosure 14 GA.	**55.90**	4.3	**59.05**	4.5
Baked Metallic (standard colors)	**2.10**	-	**2.10**	-
4" End Cap	**33.15/EA**	2.2	**34.60/EA**	2.2
8-3/8" End Cap w/Access Door	**64.70**	3.3	**66.30**	3.5
4" Wall Sleeve	**19.60**	1.6	**21.10**	1.8
6" Wall Sleeve	**22.05**	2.2	**23.70**	2.4
8-3/8" Wall Sleeve	**27.10**	2.6	**28.25**	2.8
8-3/8" Wall Sleeve w/Access Door	**50.70**	2.8	**51.20**	3.0
Wall Sleeve Support	**10.20**	0.6	**10.60**	0.8
Inside Corner 90°	**79.40**	4.4	**82.45**	4.5
Inside Corner 135°	**100.20**	4.8	**103.15**	5.0
Outside Corner 90°	**75.10**	5.4	**78.30**	5.5
Outside Corner 135°	**96.00**	5.8	**104.25**	6.0
18" Valve Compartment 16 GA.	**98.25**	5.0	**99.35**	5.2
18" Valve Compartment 14 GA.	**102.75**	5.3	**104.95**	5.5

BACKPLATE AND FLOOR ANGLE

CATALOG NUMBER	DESCRIPTION	PRICE	WT.
DVFBP-10	10" Full Backplate - Unpainted Galv	**$ 11.50/FT**	1.2
DVFBP-10	10" Full Backplate - Painted CRS	**13.20**	1.2
EAFA	Extruded Aluminum Floor Angle - 8' lengths - Unpainted	**8.85**	0.3
EAFA	Extruded Aluminum Floor Angle - 8' lengths - Baked Powder (Standard Colors)	**11.55**	0.3
EAFA	Extruded Aluminum Floor Angle - 8' lengths - Baked Metallic (Standard Colors)	**15.45**	0.3

DURA-VANE II "JDVP B1" & "JDVP B2" PEDESTAL STYLE ENCLOSURES AND ACCESSORIES

DESCRIPTION	JDVP B1 PB1 = 5-1/2"		JDVP B2 PB2= 10-7/8"	
	PRICE	*WT.*	*PRICE*	*WT.*
Enclosure 16 GA.	**$67.35/FT**	5.0	**$93.70/FT**	6.0
Enclosure 14 GA.	**89.20**	6.3	**98.75**	7.3
Baked Metallic (standard colors)	**2.20**	-	**2.45**	-
Support Bracket Assembly (Maximum 3' on Center)	**37.65/EA**	2.0	**60.50/EA**	2.4
3" End Cap	**49.45**	2.0	**122.85**	3.0
4" Wall Sleeve	**28.15**	1.9	**68.75**	2.8
6" Wall Sleeve	**29.35**	2.5	**75.05**	3.0
8-3/8" Wall Sleeve	**30.95**	3.0	**78.85**	3.5
8-3/8" Wall Sleeve w/Access Door	**92.85**	3.3		N/A
Wall Sleeve Support	**19.75**	0.8	**22.65**	1.4
Corner 90° - Specify In or Out	**187.80**	8.0	**270.00**	12.0
Corner 135° - Specify In or Out	**218.70**	9.3	**325.40**	13.0

Consult Factory for JDVP A1 or JDVP A2 Pricing.

Standard product is clear anodized grille with enclosure fronts baked powder finish in any standard colors shown in Mestek Color Selector.
Grille and enclosure painted same color at no extra charge.
No deduction is allowed for prime coat.

Note: List add will be 12% of total list price of materials tagged for tagging individual cartons with room numbers, floor, building, etc.
All accessories overlap the enclosure.

Available in Stainless Steel and Aluminum. Consult Factory.

GUARDIAN ENCLOSURES AND ACCESSORIES

S - Slope Top
F - Flat Top

ENCLOSURE LISTINGS
(Depth)
****B=5-5/16"**
(Height)
12"
18"

PERFORATION:
P = Partial

LIST PRICE SHOWN

STANDARD ENCLOSURE LENGTHS
2' thru 8' in 6" increments

SEE PAGE 2 & 3 FOR ROUGH-IN MATERIAL PRICES

GUARDIAN SECURITY ENCLOSURES

Note: Enclosure prices **do not** include brackets, hangers or backplate

DESCRIPTION	GSBS-12		GSBS-18		GSBF-12		GSBF-18	
	PRICE	*WT.*	*PRICE*	*WT.*	*PRICE*	*WT.*	*PRICE*	*WT.*
Enclosure 14 GA. Partial Perforation	**$ 79.45**/FT	5.1	**$ 97.75**/FT	7.7	**$ 79.45**/FT	5.2	**$ 97.75**/FT	7.8
Enclosure 14 GA. Full Perforation. ▲	**Consult Factory**							
Enclosure 12 GA Partial Perforation ***	**94.05**	7.1	**119.70**	10.8	**94.05**	7.2	**119.70**	10.0
Enclosure 12 GA. Full Perforation. ▲	**Consult Factory**							
Baked Powder (standard colors)	**5.15**	-	**5.35**	-	**5.15**	-	**5.35**	-
Baked Metallic (standard colors)	**7.75**	-	**7.95**	-	**7.75**	-	**7.95**	-
Partial Backplate 14 GA. - 8' Lengths Only	**9.45**	0.5	**9.45**	0.5	**9.45**	0.5	**9.45**	0.5
Full Backplate 14 GA.	**25.10**	3.1	**32.05**	4.7	**25.10**	3.1	**32.05**	4.7
3" End Cap 14 GA.	**75.05**/EA	3.1	**81.20**/EA	4.1	**72.65**/EA	3.2	**81.20**/EA	4.2
2" Intermediate Joiner Piece ▲	**44.10**	1.2	**51.20**	1.9	**44.10**	1.6	**51.20**	2.1
4" Wall Sleeve 14 GA. (LH or RH)	**51.20**	2.1	**58.45**	2.7	**51.20**	3.0	**58.45**	4.0
6" Wall Sleeve 14 GA (LH or RH)	**55.15**	3.1	**62.50**	4.1	**55.15**	3.2	**62.50**	4.2
8-3/8" Wall Sleeve 14 GA (LH or RH)	**62.80**	4.3	**71.35**	6.5	**62.80**	4.5	**71.35**	6.7
Wall Sleeve Support (LH or RH)	**19.80**	1.1	**20.95**	1.3	**19.80**	1.2	**20.95**	1.5
Inside Corner 90° 14 GA.	**156.45**	10.2	**180.00**	11.5	**156.45**	10.4	**180.00**	11.7
Outside Corner 90° 14 GA.	**159.50**	10.9	**185.40**	12.5	**159.50**	11.1	**185.55**	12.7

Notes: List add will be 12% of total list price of materials tagged for tagging individual cartons with room numbers, floor, building, etc.
All Guardian enclosures assemblies require standard wall mounted “B” ball bearing hangers.
Consult factory for type, availability and price of tamper resistant fasteners and drive tools.
These items are not included in above pricing.
For Torx-Pin security stainless steel fasteners to secure accessories, consult factory.
▲ 2" intermediate joiner piece used with full perforation enclosure at enclosure joints. Its use is optional with partial perforation.

**** An offset of 4-3/8" available by quote, consult factory.**

***** For orders 25 feet or less, consult factory for pricing.**

Available in Stainless Steel. Consult Factory.

STANDARD ENCLOSURE MODIFICATIONS

DRAFT BARRIER, RETURN TO WALL AND LOUVERED INLET STYLES

Does not apply to Standard Classic Enclosure with Underlapping Accessories or to Duravane Enclosure

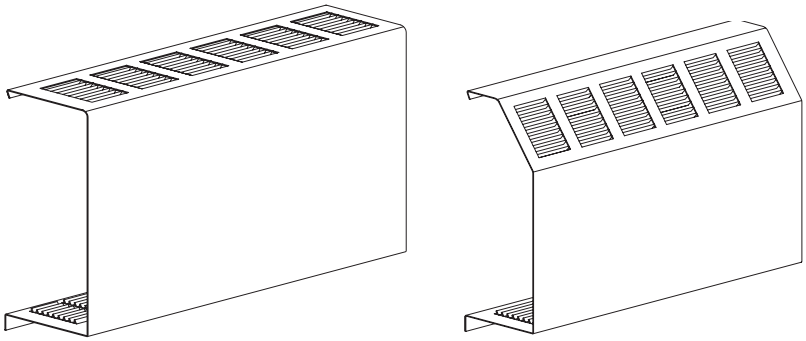

Return to Wall, Louvered Inlet
(RWLI)

LIST ADD PER FOOT OF ENCLOSURE		
SIZE	SIZE	SIZE
K OFFSET $ 10.60/FT	A OFFSET $ 13.30/FT	B OFFSET $ 14.00/FT

*Consult factory for use on JVK-S8 & AR7.

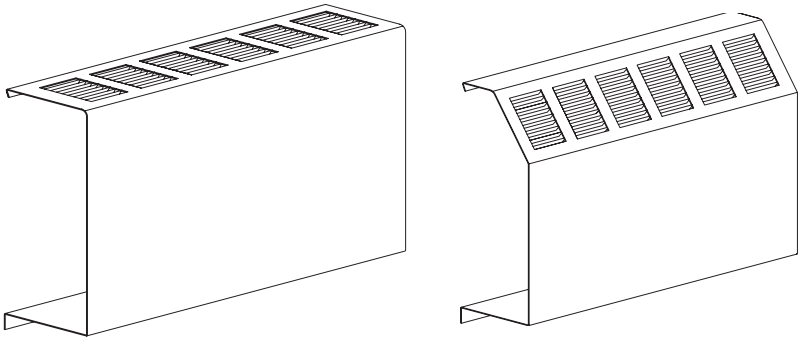

Return to Wall, No Inlet Louvers
(Draft Barrier Style)
(RWDB)

LIST ADD PER FOOT OF ENCLOSURE		
SIZE	SIZE	SIZE
K OFFSET $ 10.60/FT	A OFFSET $ 13.30/FT	B OFFSET $ 14.00/FT

*Consult factory for use on JVK-S8 & AR7.

METAL PIPING ENCLOSURES

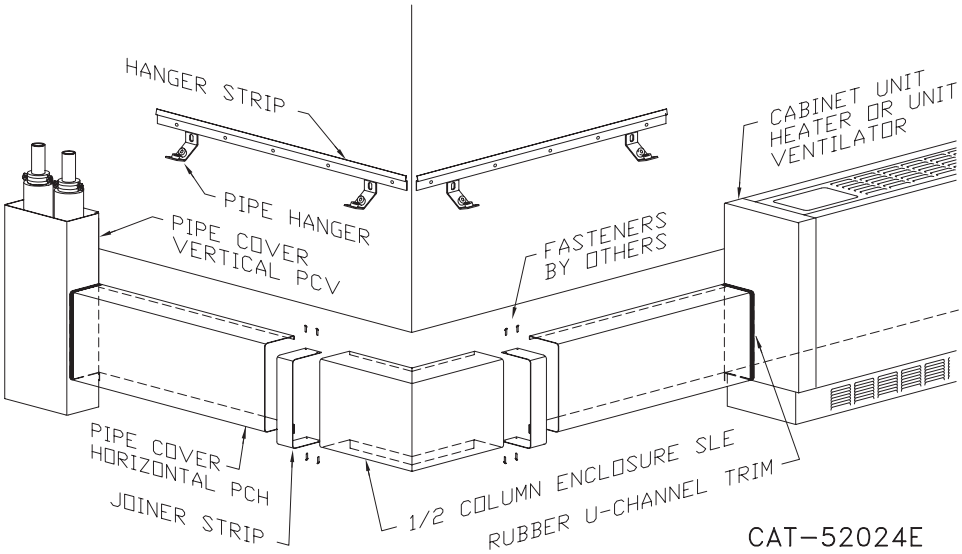

CATALOG NUMBER	DESCRIPTION		LIST PRICE	WT.
Pipe Cover Horizontal				
PCH-4	4" High 18 GA. - 8' Lengths	*Prime*	**$16.60/FT**	1.8
		Add for Baked Powder (standard colors)	**3.00**	—
		Add for Baked Metallic (standard colors)	**4.35**	—
PCH-5	5" High 18 GA. - 8' Lengths	*Prime*	**17.95**	2.0
		Add for Baked Powder (standard colors)	**3.15**	2.0
		Add for Baked Metallic (standard colors)	**4.65**	—
PCH-11	11" High 18 GA. - 8' Lengths	*Prime*	**21.95**	3.0
		Add for Baked Powder (standard colors)	**3.70**	—
		Add for Baked Metallic (standard colors)	**5.40**	—
PCH-17	17" High 18 GA. - 8' Lengths	*Prime*	**27.55**	4.0
		Add for Baked Powder (standard colors)	**4.30**	—
		Add for Baked Metallic (standard colors)	**6.30**	—
SCE-4-TS2	2 1/2" Joiner Strip For 4" Assembly		**37.35/EA**	0.3
SCE-4-TS4	4" Joiner Strip For 4" Assembly		**39.10**	0.4
SCE-5-TS2	2 1/2" Joiner Strip For 5" Assembly		**37.65**	0.5
SCE-5-TS4	4" Joiner Strip For 5" Assembly		**40.05**	0.5
SCE-11-TS2	2 1/2" Joiner Strip For 11" Assembly		**40.05**	1.0
SCE-11-TS4	4" Joiner Strip For 11" Assembly		**41.90**	1.0
SCE-17-TS2	2 1/2" Joiner Strip For 17" Assembly		**41.90**	1.5
SCE-17-TS4	4" Joiner Strip For 17" Assembly		**43.90**	1.5
B-610	Mounting Strip - 8' Lengths Only		**4.30/FT**	0.4
RPH-K	Roll Pipe Hanger		**7.45/EA**	0.2

CATALOG NUMBER	DESCRIPTION		LIST PRICE	WT.
Pipe Cover Vertical				
PCHV-52	5 X 5 Two Side 18 GA. - 8' Lengths	*Prime*	**$15.40/FT**	1.6
		Add for Baked Powder (standard colors)	**3.00**	—
		Add for Baked Metallic (standard colors)	**4.55**	—
PCHV-52-TS2	2" Joiner Strip		**34.65 /EA**	1.0
PCHV-82	8 X 8 Two Side 18 GA. - 8' Lengths	*Prime*	**$19.05/FT**	2.6
		Add for Baked Powder (standard colors)	**3.15**	—
		Add for Baked Metallic (standard colors)	**4.75**	—
PCHV-82-TS2	2" Joiner Strip		**41.60/EA**	2.0
PCHV-53	5 X 5 Three Side 18 GA. - 8' Lengths	*Prime*	**$21.60/FT**	2.5
		Add for Baked Powder (standard colors)	**3.70**	—
		Add for Baked Metallic (standard colors)	**5.40**	—
PCHV-53-TS2	2" Joiner Strip		**41.60/EA**	1.5
PCHV-83	8 X 8 Three Side 18 GA. - 8' Lengths	*Prime*	**$28.55/FT**	4.0
		Add for Baked Powder (standard colors)	**4.30**	—
		Add for Baked Metallic (standard colors)	**6.30**	—
PCHV-83-TS2	2" Joiner Strip		**48.15/EA**	3.0
1 x 1 FA	1 X 1 Side Support Angle (2 Per Vertical Pipe Enclosure - 8' Lengths)	*Prime*	**$5.10/FT**	0.4
		Baked Powder (standard colors)	**7.90**	—
		Baked Metallic (standard colors)	**11.80**	—
UCHAN	'U' Rubber Channel Trim		**$4.00/FT**	0.1

All PCH covers are 3-3/4" deep.
Available in Stainless Steel and Aluminum. Consult Factory.

STANDARD COLUMN ENCLOSURE SETS

CAT #	DESCRIPTION	List Price	Wt.
SCE-4	4" High	$ 195.20	4.0
SCE-5	5" High	$ 214.85	5.0
SCE-11	11" High	$ 245.85	11.0
SCE-17	17" High	$ 267.15	17.0

Price Includes
2 - Corners
1 - 2-1/2" Joiner Strip
1 - 4'0" B-610 Hanger Strip
1 - Rubber U-Channel
Roll Pipe Hangers are separate

TYPICAL ENCLOSURE LAYOUTS

STYLES “S” AND “KS” SLOPE TOP INSTALLATION AND ACCESSORY DETAILS

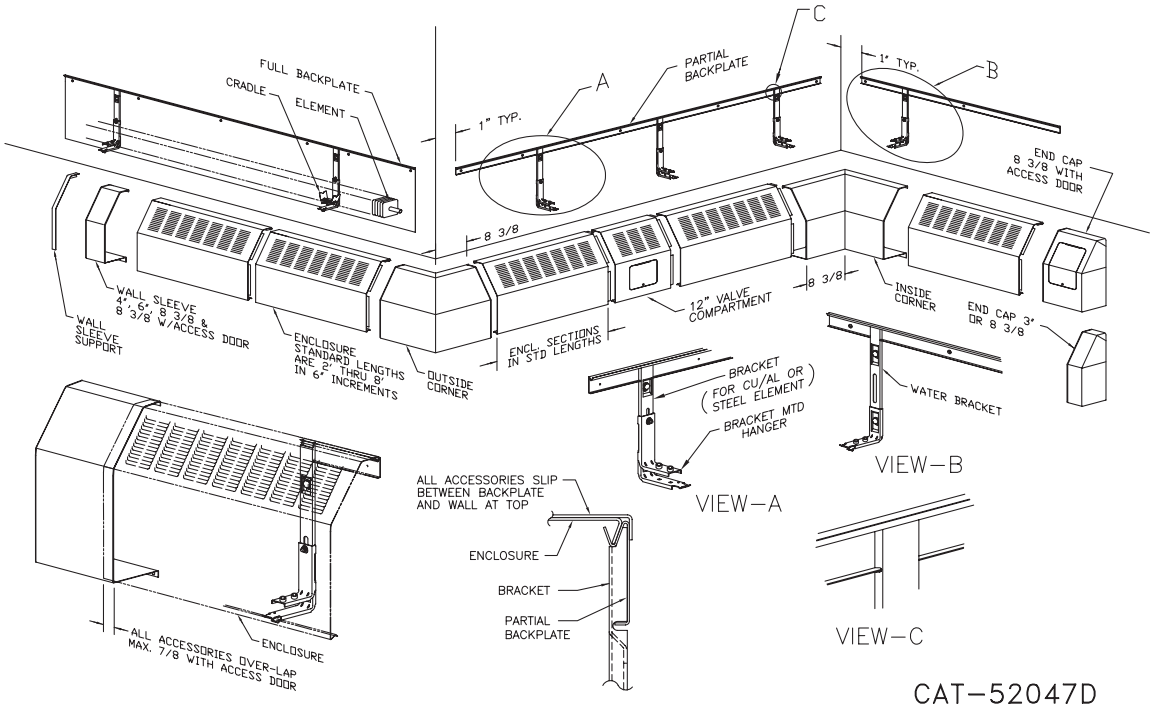

STYLES “PM” PEDESTAL MOUNTED INSTALLATION AND ACCESSORY DETAILS

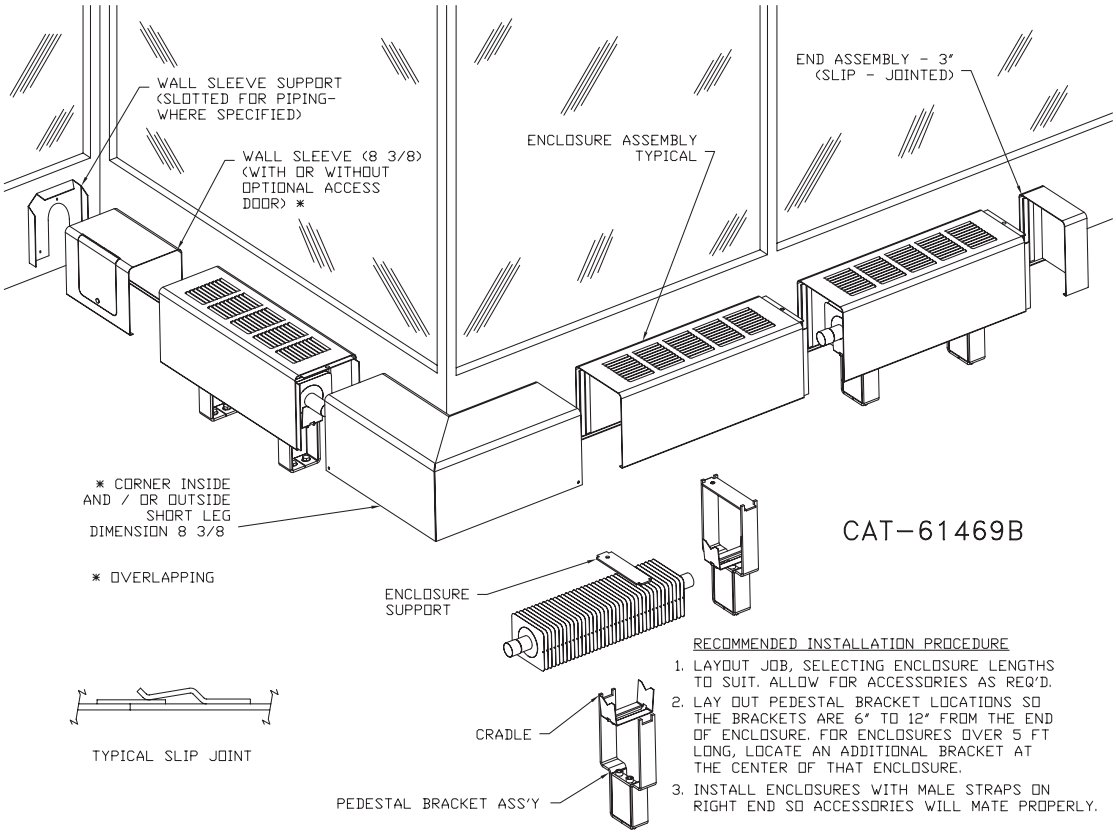

“J” STYLE CLASSIC WITH SLIP-JOINTED EDGES, OVERLAPPING ACCESSORY DETAILS

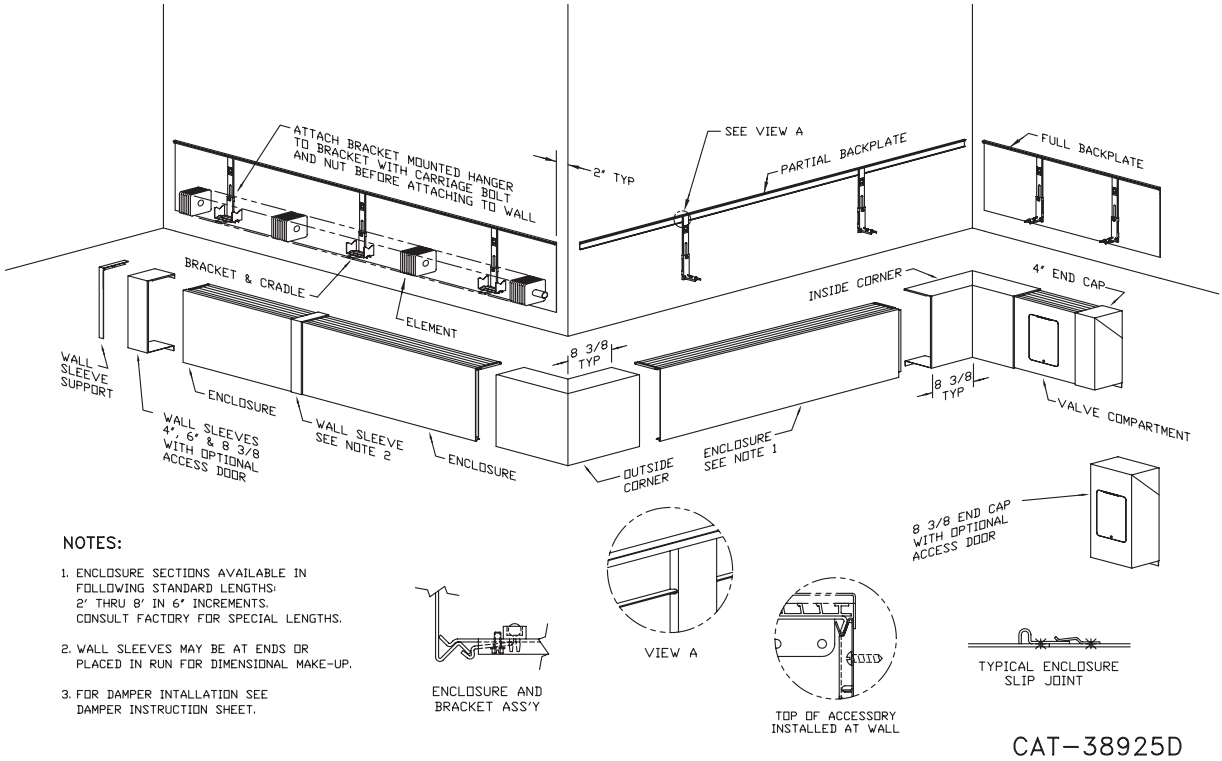

NOTES:

1. ENCLOSURE SECTIONS AVAILABLE IN FOLLOWING STANDARD LENGTHS: 2' THRU 8' IN 6" INCREMENTS. CONSULT FACTORY FOR SPECIAL LENGTHS.
2. WALL SLEEVES MAY BE AT ENDS OR PLACED IN RUN FOR DIMENSIONAL MAKE-UP.
3. FOR DAMPER INTALLATION SEE DAMPER INSTRUCTION SHEET.

STANDARD CLASSIC WITH WIPED EDGE, UNDERLAPPING ACCESSORY DETAILS

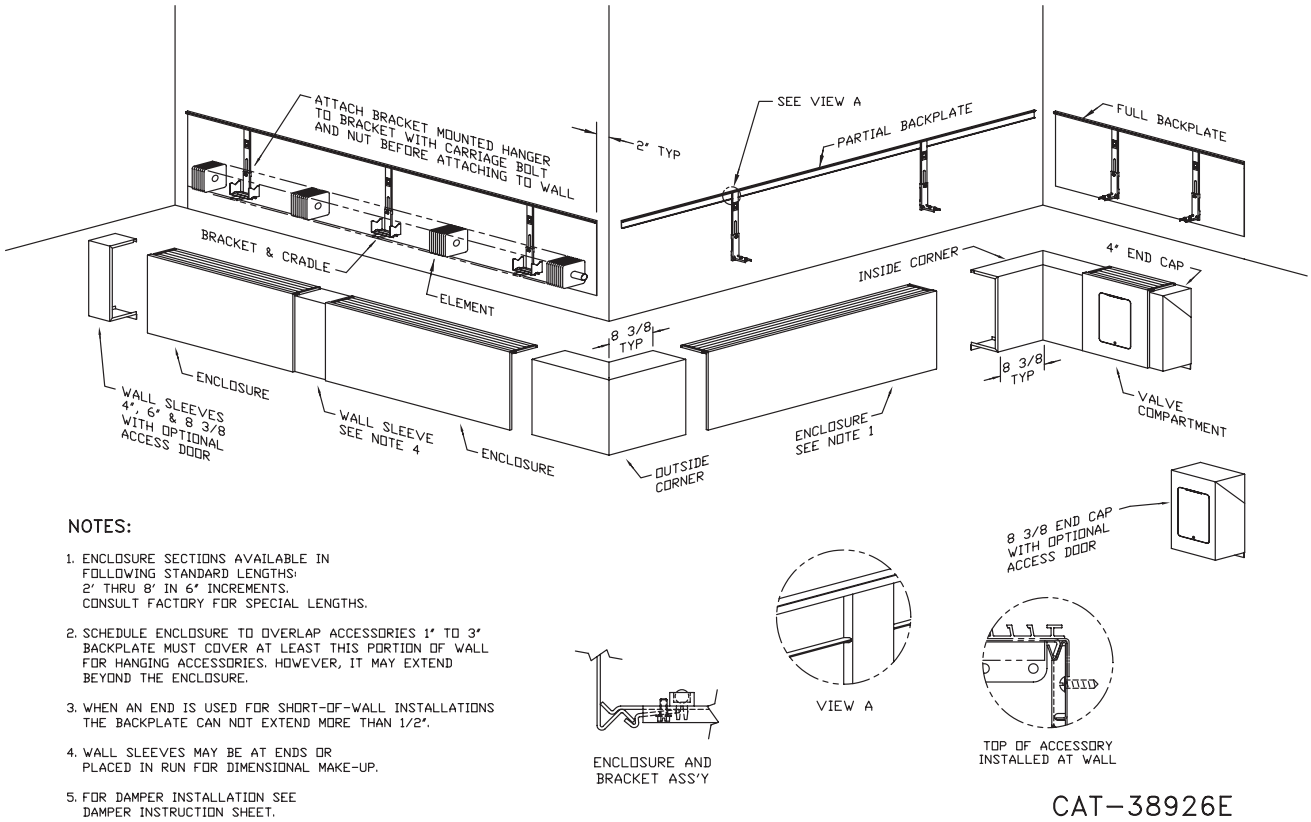

NOTES:

1. ENCLOSURE SECTIONS AVAILABLE IN FOLLOWING STANDARD LENGTHS: 2' THRU 8' IN 6" INCREMENTS. CONSULT FACTORY FOR SPECIAL LENGTHS.
2. SCHEDULE ENCLOSURE TO OVERLAP ACCESSORIES 1" TO 3". BACKPLATE MUST COVER AT LEAST THIS PORTION OF WALL FOR HANGING ACCESSORIES. HOWEVER, IT MAY EXTEND BEYOND THE ENCLOSURE.
3. WHEN AN END IS USED FOR SHORT-OF-WALL INSTALLATIONS THE BACKPLATE CAN NOT EXTEND MORE THAN 1/2".
4. WALL SLEEVES MAY BE AT ENDS OR PLACED IN RUN FOR DIMENSIONAL MAKE-UP.
5. FOR DAMPER INSTALLATION SEE DAMPER INSTRUCTION SHEET.

FINNED TUBE ORDERING PROCESS

A. Select enclosure model and height as well as element based on plans, specifications and/or heat output requirements

B. Rough-in (page 4)
   1. Select partial or full backplate (Backplate should extend to within 1" of end of runs to support accessories and will therefore typically have more footage than cover). Make sure that backplate for valve compartment is included. Partial backplate comes in 8' lengths and is cut on the job to length. Therefore, some extra should be ordered to cover small cuts thrown away.
      a. Urethane gasket is typically required factory installed or field installed behind hanger strip.

   2. Brackets – Typically water brackets are specified. When ordering brackets you must know the offset and height of the enclosure.
      a. Minimum of two brackets per section of cover, three with cover over six feet (see page 4). Minimum of one hanger or wall sleeve support on end accessories that are not returned to the wall (i.e., LCS-10).
      b. If return pipe hangers are specified, these should be ordered based on a minimum of one roll pipe hanger per 4' of supported pipe.
      c. In two tier applications, additional bracket mounted hangers will be required. Depending upon the height of an enclosure, this can be accomplished by adding a second tier on the original bracket. A ball bearing hanger bracket is mounted to the front of the original bracket. Typically the same number of ball bearing hangers or intermediate hangers are required as original brackets. 20" and 24" brackets have slots for second tier (bracket mounted hangers).
      d. For shorter enclosures, wall mounted hangers (BB Hgr) must be used mounted off to the side of the original brackets and hangers.
      e. For steam 2 tier installations, a standard bracket with 2 bracket mounted hangers will be required or 1 bracket mounted hanger and 1 wall mounted hanger.

   3. In to the floor installations, louver inlet, either an extruded aluminum floor angle or a standard floor angle, one by one, will be required (See page 3).

   4. Element footage based on plan and spec for heat loss (In two tier applications footage is doubled). Insure that the element selected fits in the enclosure selected. Element cradles will ship with element based on the number of brackets and hangers ordered (For elements available se pages 2 & 3).

C. Cover and accessories
   1. Enclosure model and height determines which page of the price book to consult. Review plans and specifications or job measurements to determine length of enclosure required. Overall enclosure length can be adjusted based on the accessories to be used in conjunction with individual pieces of cover.

   2. Enclosure Options
      a. Select gauge as specified.
      b. Add appropriate charge if baked enamel finish is specified. Note: Special colors take additional time and must be quoted by factory.
      c. Add for knob or tamper proof dampers if required by plans and specifications.

   3. Accessories – Specify the number and quantity of accessories. All special degree corners must be quoted by factory and will include a list set-up charge and engineering charge on each individual angle.

   4. Additional Charges
      a. Check if tagging is required. Add a 12% list charge for factory tagging. See description of “tagging” in price sheet.
      b. If return to wall closed inlet or return to wall louvered inlet are specified, apply the list add per foot shown on the associated price sheet (page 15).

TERMS

• **FREIGHT TERMS:** F.O.B Westfield. NO FREIGHT ALLOWANCE ON SHIPMENTS OF LESS THAN 2000 lbs. For shipments of 2000 lbs., full freight will be allowed, however a freight surcharge will be applied by zone as follows:

ZONE 1: 3% of list price

USA: Connecticut, Delaware, District of Columbia, Maine, Maryland, Massachusetts, New Hampshire, New Jersey, New York, Pennsylvania, Rhode Island, Vermont, Virginia, West Virginia, Illinois, Indiana, Iowa, Kentucky, Michigan, Minnesota, Missouri, North Carolina, Ohio, Tennessee, Wisconsin

Canada: Ontario, Maritimes, Quebec

ZONE 2: 4% of list price

USA: Alabama, Arkansas, Colorado, Florida, Georgia, Kansas, Louisiana, Mississippi, Nebraska, New Mexico, North Dakota, Oklahoma, South Carolina, South Dakota, Texas, Utah, Wyoming

Canada: Manitoba, Saskatchewan

ZONE 3: 5% of list price

USA: Alaska, Arizona, California, Idaho, Montana, Nevada, Oregon, Washington

Canada: Alberta, British Columbia

FREIGHT ROUTING SHALL BE AT THE DISCRETION OF THE SHIPPER.

• **PRICES:** Published trade prices in effect at time of receipt of order at our offices are firm provided the complete order is released for fabrication.

All special quotations remain firm for 60 days.

No obligation is assumed by this Corporation to sell, to anyone holding this book, any of the items listed herein at the prices stated.

• **VALID ORDERS:** An order is not a valid order until acknowledged by the home office in Westfield, MA.

• **TERMS:** Net 30 Days. Prepaid freight or cartage charges paid by us are not subject to cash discount.

• **TAXES:** The prices listed herein exclude Federal, State, or Municipal Tax applicable to the transaction. Such taxes, where applicable to the transaction should be paid directly to the governing body by the Purchaser.

• **CLAIMS:** As all goods are shipped at buyer's risk they should be examined carefully before signing transportation delivery receipts. If transportation company tenders delivery of goods in bad order, buyer should insist on transportation agent making a notation of conditions on delivery receipt and request an inspection within 48 hours, thus enabling buyer to secure prompt payment of transportation claims filed by him for value of damaged material.

The responsibility of this Company ceases upon delivery of goods in good order to transportation companies. All orders are accepted subject to delays on account of government requirements, strikes, accidents or other causes beyond our control.

• **MINIMUM ORDERS:** Orders with an invoice of less than $25.00 will be invoiced at $25.00.

• **RETURNED GOODS**: Goods must not be returned except by written permission from the factory, and when so returned will be accepted only as stated in the following conditions:

1. Special material or material with baked enamel finish is not subject to return.
2. All transportation charges for returned goods must be prepaid by the shipper.
3. Standard Fin-Tube elements (S-143, S-144, C-144, C-145, C-1435, C-35) (lengths from 2' to 12' in 6" increments) will be accepted provided they are received in useable condition and subject to a 25% rehandling charge.
4. **Enclosures of any type are not subject to return.**
5. **Modified** or **special** accessories of any type are not subject to return.
6. Standard catalogued accessories (brackets, hangers splice plates, corner pieces and end pieces) may be returned upon written permission. After inspection at the factory, if they are found to be in good condition, they will be accepted for credit, subject to a 25% rehandling charge.
7. No goods will be accepted for return more than 6 months after shipment.

CHANGES TO A RELEASED ORDER – Any changes to a released order will result in a $25.00 net charge per change.

CANCELLATIONS – A minimum of 10% and maximum of all time and material will be charged, depending on work completed.

LIMITED WARRANTY

Commercial Finned Tube Radiation

1. The Manufacturer warrants to the original owner at the original installation site that the Commercial Finned Tube (the “Product”) will be free from defects in material or workmanship for a period not to exceed (1) year from date of shipment from the factory. If upon examination by the Manufacturer the Product is shown to have a defect in material or workmanship during the warranty period, the Manufacturer will repair or replace, at its option, that part of the Product which is shown to be defective.

2. This limited warranty does not apply:
   (a) if the Product has been subjected to misuse or neglect, has been accidentally or intentionally damaged, has not been installed, maintained or operated in accordance with the furnished written instructions, or has been altered or modified in any way by any unauthorized person.
   (b) to any expenses, including labor or material, incurred during removal or reinstallation of the defective Product or part thereof.
   (c) to any workmanship of any installer of the Product.

3. This limited warranty is conditional upon:
   (a) shipment, to the Manufacturer, of that part of the Product thought to be defective. Goods may only be returned with the prior written approval of the Manufacturer. All returns must be freight prepaid.
   (b) determination in the reasonable opinion of the Manufacturer that there exists a defect in material or workmanship.

4. Repair or replacement of any part under this Limited Warranty shall not extend the duration of the warranty with respect to such repaired or replaced part beyond the stated warranty period.

5. THIS LIMITED WARRANTY IS IN LIEU OF ALL OTHER WARRANTIES, EITHER EXPRESS OR IMPLIED, AND ALL SUCH OTHER WARRANTIES, INCLUDING WITHOUT LIMITATION IMPLIED WARRANTIES OF MERCHANTABILITY OR FITNESS FOR A PARTICULAR PURPOSE, ARE HEREBY DISCLAIMED AND EXCLUDED FROM THIS LIMITED WARRANTY. IN NO EVENT SHALL THE MANUFACTURER BE LIABLE IN ANY WAY FOR ANY CONSEQUENTIAL, SPECIAL, OR INCIDENTAL DAMAGES OF ANY NATURE WHATSOEVER, OR FOR ANY AMOUNTS IN EXCESS OF THE SELLING PRICE OF THE PRODUCT OR ANY PARTS THEREOF FOUND TO BE DEFECTIVE. THIS LIMITED WARRANTY GIVES YOU SPECIFIC LEGAL RIGHTS. YOU MAY ALSO HAVE OTHER RIGHTS WHICH MAY VARY BY EACH JURISDICTION.

NOTES:

STERLING®
COMMERCIAL HYDRONIC PRODUCTS
260 North Elm St., Westfield, MA 01085 Tel: (413) 564-5535
www.sterlingheat.com
A MESTEK COMPANY